Co-funded by the
Erasmus+ Programme
of the European Union

INDUSTRIAL EXPERT INDEX

INDEX: Industrial Expert

Advanced Course

INDUSTRIAL EXPERT INDEX

1. IoT and Additive Manufacturing in precision agriculture: analysis of a real case and potential developments

Prerequisites

Have successfully passed the following courses:

- INDEX Basic course
- INDEX Intermediate level courses:
  - IoT
  - Additive Manufacturing

Case Study Description

The article https://www.mdpi.com/1424-8220/20/7/2028 (open access) provides a description of a real case of a network of sensors for soil humidity and temperature in an open field as well as air humidity and temperature in a greenhouse in a small-sized farm, which was developed within the framework of the LoRaFarM project from the University of Parma, Italy (Figure 1). The article focuses on the prototyping phase of the electronic components and the IT infrastructure.

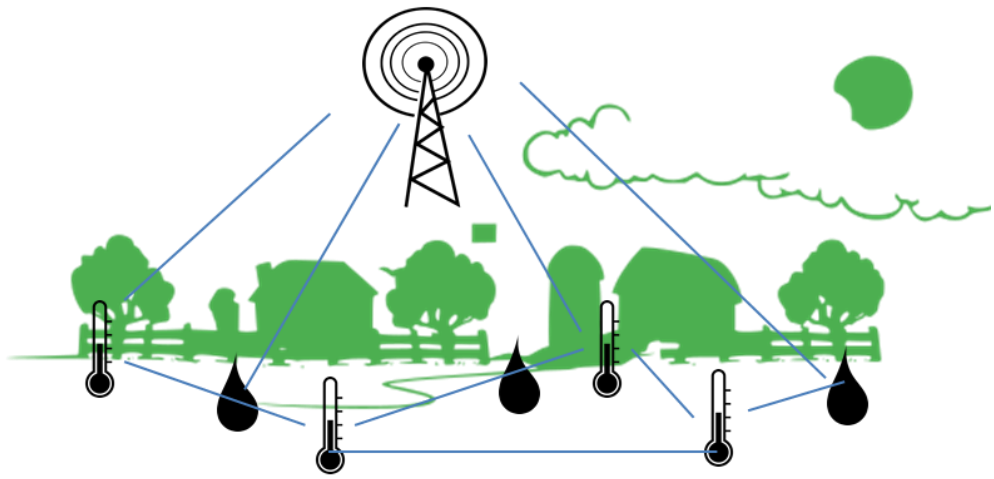

Figure 1: Sketch of the network of sensors. Source: CC BY-SA by INDEX consortium.

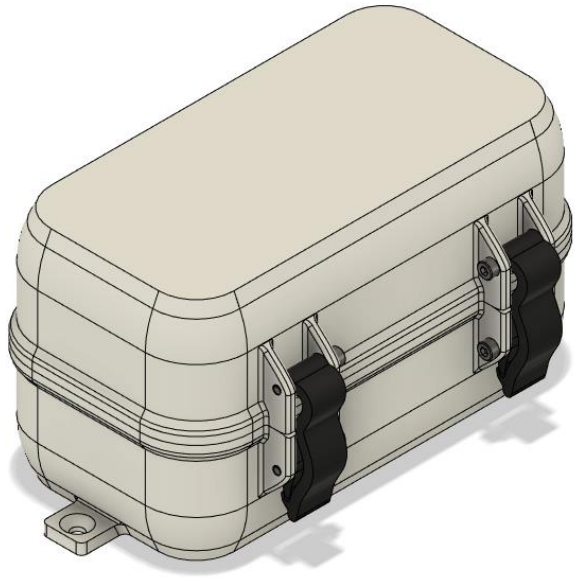

Figure 2: Modified 3D model of the weather-resistant box. Source: CC BY-SA by thingiverse.

Now imagine that someone wishes to push the prototyping phase forward with the fabrication of weather-resistant boxes (Figure 2) for the electronic components that are intended to work in an open field.

What the student should do

Put together a portfolio containing the following items:

A brief intro´ into the state of the art of IoT in agriculture and the LoRaFarM project (max 2000 chars).

A report describing and motivating the overall network architecture with respect to parameters like data size, data rate, data storage, security issues, user interface, scalability, etc. (max 4000 chars).

A report describing and motivating the choice of each component, i.e. the end nodes, gateways, server, etc. with respect to parameters like power, range, weather resistance, costs, etc. (max 4000 chars).

A sketch showing a box for the electronic components embedded within an end-node of your choice. Make sure that the box is waterproof and suitable to fit all relevant components. Also, consider the environmental requirements, and how the box will be mounted. Explain your design (max 2000 chars).

Choose an AM process fitting your design and all framework conditions. Explain your choice (max 4000 chars).

In order to practice the creation of FDM-printable files, use Fusion 360 to open the enclosed f3z-file. Export the bottom of the box as well as the arm and the cam of the latch as a stl-file. Then use Cura to place all three parts on the build platform and make the preprocessing settings. Export the file to 3mf-format. Explain which settings you made (max 4000 chars).

INDUSTRIAL EXPERT INDEX

Case study features

A text from 10k to 20k characters + file.

Time required for the realization: 20 hours.

Presentation requirements

Free format: the student can choose the format that best describes the type of case study he/she is developing as long as he/she respects the above-mentioned features.

Tools & resources

To complete the case study the student will need to:

Read and understand the article https://www.mdpi.com/1424-8220/20/7/2028 (open access);

Download and process the enclosed example of a box by using Fusion 360 and Cura (Choose "Ultimaker 2 Extended +" as a printer);

Do a web search.

Assessment criteria

	very uninnovative			very innovative
1. Innovativeness of the proposed solution	0	1	2	3
	less than 1 content			a various mixture of content
2. Ability to use the content from the courses involved	0	1	2	3

	less than 1 technology			a various mixture of technologies
3. Ability to apply the technologies presented in the courses involved	0	1	2	3
	very unclear			very clear
4. Clarity of the content	0	1	2	3
	very superficial			very deep
5. Quality of the content	0	1	2	3
	very poor			very precise
6. Use of appropriate technical language	0	1	2	3
	very unorganised and not structured			very organised and well structured

7. General organisation/structure	0	1	2	3

Learning outcome & ECVET points

Knowledge	Skills	Competence
- he/she has knowledge of a typical prototypical architecture for the IoT in agriculture; of issues related to 3d-printing of objects for use in outdoor environments	- he/she is able to describe and motivate typical solutions for the IoT in agriculture; to work out relevant specs, such as the overall dimensions and wiring of end nodes; to edit and customize printable files for outdoor applications	- he/she has developed specific expertise in the subfields of the IoT in agriculture and of 3D-printing of objects for use in outdoor environments

Checklist for students

BEFORE STARTING THE CASE STUDY	YES	NO
I read the case study instructions carefully		
I know which INDEX courses/modules are involved in the case study		

I have the necessary prerequisites		
I understand the case study description		
I understand what I must do to properly accomplish the task		
I know what I need to perform the task (tools/resources)		
I understand the deadline for delivery of the case study		
I have estimated the deadline for delivery of the case study		
I understand how to deliver the project		
I understand the assessment criteria		
I am aware of the ECVET points I can achieve		

If you have marked some of the above “no”, read the guidelines again, or feel free to contact the trainer.

Submit the assignment

Assemble and upload a portfolio containing text, the STL files and the 3MF file with all preprocessing settings:

Portfolio Upload

INDUSTRIAL EXPERT INDEX

This assignment has several steps. In the first step, you'll provide a response to the prompt. The other steps appear below the Your Response field.

Enter your response to the prompt. You can save your progress and return to complete your response at any time before the due date (Monday, Jan 1, 2029 01:00 CET). After you submit your response, you cannot edit it.

When ready, upload your files.

You may continue to work on your response until you submit it.

Submit your response and move to the next step.

2. CAN-BUS and Arduino for automotive applications, and MEMS accelerometers

Prerequisites

Have successfully passed the following courses:

- INDEX Basic course
- INDEX Intermediate level courses:
    - IoT
    - Sensors and Automation

Case Study Description

The Controller Area Network (CAN) BUS is an industrial standard for M2M communication that is particularly useful in noisy environments, such as automotive applications. In this context, the need for reliable and miniaturized sensors is becoming more and more ubiquitous, especially as autonomous vehicles are making their way into the marketplace. For instance, MEMS devices represent an outstanding solution for the realization of accelerometers for a broad variety of purposes that include e.g. stability control, headlight levelling and vehicle alarm.

Figure 1: Photograph of the Arduino CAN-BUS Shield v2. Source: Arduino Store

What the student should do

Carry out the following tasks:

1. Provide a description of the CAN standard.
2. Now imagine that you wish to connect two Arduino boards to a CAN BUS, and that you aim to use one of them to send an analog reading once a minute, and the other to receive it and print it to a serial monitor. Provide a description of the hardware that you may implement, as well as examples of the firmware that you may upload on both boards. (Hint: you may want to start your search from https://www.arduino.cc/reference/en/libraries/can/ , then use the Arduino Web Editor to identify an applicable library and build upon its examples.)

3. Now imagine that the analog reading originates from a MEMS accelerometer on board an autonomous vehicle. Download the article doi:10.3390/mi9110602 and answer the following questions: what is the working principle of MEMS accelerometers? What are their principal specifications and what is their practical relevance in specific case scenarios? What are the setups used to convert the mechanical deformation into a measurable signal?

Case study features

- A text from 10k to 20k characters.

- At least two Arduino sketches based on the CAN library: one for use to acquire and transmit an analog signal, and one to receive and parse it.

Time required for the realization: 20 hours.

Presentation requirements

Free format: the student can choose the format that best describes the type of case study he/she is developing as long as he/she respects the above-mentioned features.

Tools & resources

To complete the case study the student will need:

- Any text editor;
- Access to the Internet.

Assessment criteria

	very uninnovative			very innovative
1. Innovativeness of the proposed solution	0	1	2	3
	less than 1 content			a various mixture of content
2. Ability to use the content from the courses involved	0	1	2	3

	less than 1 technology			a various mixture of technologies
3. Ability to apply the technologies presented in the courses involved	0	1	2	3
	very unclear			very clear
4. Clarity of the content	0	1	2	3
	very superficial			very deep
5. Quality of the content	0	1	2	3
	very poor			very precise
6. Use of appropriate technical language	0	1	2	3
	very unorganised and not structured			very organised and well structured

7. General organisation/structure	0	1	2	3

Learning outcome & ECVET points

Knowledge	Skills	Competence
- he/she has knowledge of the CAN bus, relevant implementations in the Arduino ecosystem, and MEMS accelerometers.	- he/she is able to describe the CAN bus, to incorporate it in small projects based on the Arduino ecosystem, and to describe the specs of MEMS accelerometers.	- he/she has developed expertise in key and emerging areas of the automotive industry like the CAN bus and MEMS accelerometers.

ECVET points: 2

Co-funded by the
Erasmus+ Programme
of the European Union

INDUSTRIAL EXPERT INDEX

Checklist for students

BEFORE STARTING THE CASE STUDY	YES	NO
I read the case study instruction s carefully		
I know which INDEX courses/modules are involved in the case study		
I have the necessary prerequisites		
I understand the case study description		
I understand what I must do to properly accomplish the task		
I know what I need to perform the task (tools/resources)		
I understand the deadline for delivery of the case study		
I have estimated the deadline for delivery of the case study		
I understand how to deliver the project		
I understand the assessment criteria		

I am aware of the ECVET points I can achieve		

If you have marked some of the above “no”, read the guidelines again or feel free to contact the trainer.

Submit the assignment

Assemble and upload a portfolio containing text and code

Portfolio Upload

This assignment has several steps. In the first step, you'll provide a response to the prompt. The other steps appear below the Your Response field.

Enter your response to the prompt. You can save your progress and return to complete your response at any time before the due date (Monday, Jan 1, 2029 01:00 CET). After you submit your response, you cannot edit it.

When ready, upload your files

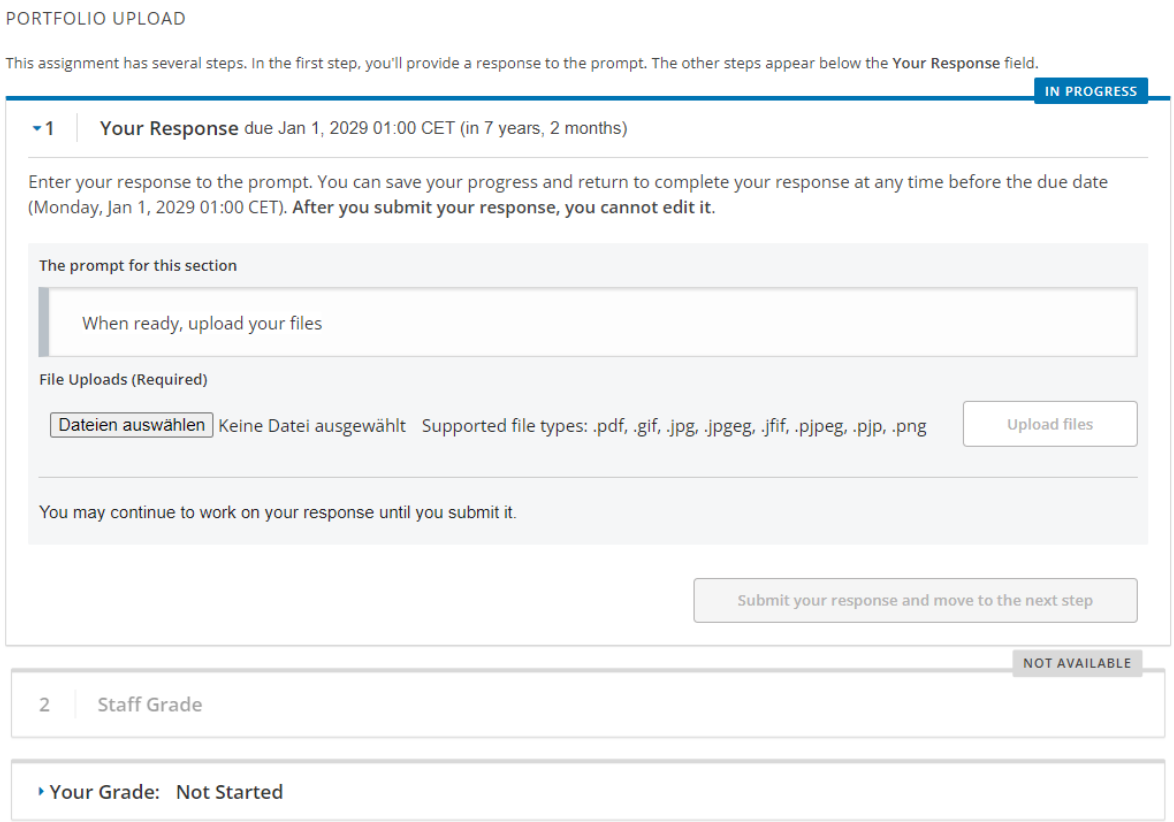

3. CircuitPython and an MCU for wearable applications, and Continuous Glucose Monitoring sensors

Prerequisites

Have successfully passed the following courses:

- INDEX Basic course
- INDEX Intermediate level courses:
  - IoT
  - Sensors and Automation

Case Study Description

CircuitPython is an open-source derivative of MicroPython language targeted towards beginners. Its development is supported by Adafruit Industries. It is a software implementation of Python 3 language that has been customized and ported to run on several MCUs, such as the Adafruit Gemma M0 (https://learn.adafruit.com/adafruit-gemma-m0/overview) and many more. It is a full Python compiler

and runtime that runs on constrained devices. It includes a selection of core Python libraries, modules that give access to the lower-level hardware, as well as higher-level libraries for beginners. In turn, the Adafruit Gemma M0 is a miniature board suited for wearable applications. At the time of writing, it is shipped by Adafruit Industries with CircuitPython on board. The spread of wearable technologies is revolutionizing various aspects of our lives ranging from health to entertainment and fashion. In particular, healthcare systems are standing before major innovations like the possibility to continuously monitor vital parameters in real time, such as e.g. the level of plasmatic glucose in patients suffering from chronic diabetes.

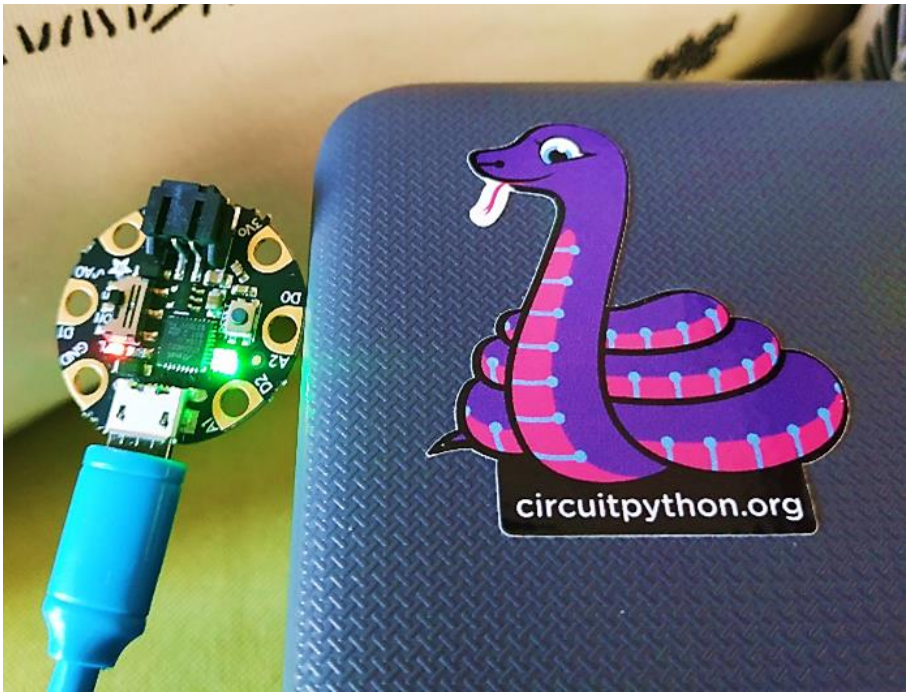

Figure 1: Photograph of an Adafruit Gemma M0 board. Source: CC BY-SA by INDEX consortium.

What the student should do

Carry out the following tasks:

1. Search the web and describe the main differences between implementing code with C++ and CircuitPython, by emphasizing the basic notions of compiling and interpreting programming scripts, and the relevant challenges posed on the hosting hardware.
2. In spite of fundamental differences, it is often possible to convert the same code from one language to the other. For instance, translate the Arduino sketch presented in the "Programming Analog inputs and a voltage divider example" unit of the "Internet of Things – Intermediate Module" course into a CircuitPython script, by taking inspiration from the list of examples presented in https://learn.adafruit.com/adafruit-gemma-m0/the-next-step.
3. Now imagine using this code to parse an analog reading originating from a wearable sensor for Continuous Glucose Monitoring (CGM). Download the article doi:10.3390/electronics6030065 and search the web in order to answer the following questions: what are the main types of glucose-sensing mechanisms for non or mini-invasive use? In particular, what is the working principle and what has been the evolution of Glucose-Oxidase Sensors? What has been their pathway towards wearable technologies and the IoT?

Case study features

- A text from 10k to 20k characters.
- At least one Circuit Python script to manage and process an analog input.

Time required for the realization: 20 hours.

Presentation requirements

Free format: the student can choose the format that best describes the type of case study he/she is developing as long as he/she respects the above-mentioned features.

Tools & resources

To complete the case study the student will need:

- Any text editor;
- Access to the Internet.

INDUSTRIAL EXPERT INDEX

Assessment criteria

	very uninnovative			very innovative
1. Innovativeness of the proposed solution	0	1	2	3
	less than 1 content			a various mixture of content
2. Ability to use the content from the courses involved	0	1	2	3
	less than 1 technology			a various mixture of technologies
3. Ability to apply the technologies presented in the courses involved	0	1	2	3
	very unclear			very clear
4. Clarity of the content	0	1	2	3

	very superficial			very deep
5. Quality of the content	0	1	2	3
	very poor			very precise
6. Use of appropriate technical language	0	1	2	3
	very unorganised and not structured			very organised and well structured
7.General organisation/structure	0	1	2	3

Co-funded by the
Erasmus+ Programme
of the European Union

INDUSTRIAL EXPERT INDEX

Learning outcome & ECVET points

Knowledge	Skills	Competence
- he/she has knowledge of CircuitPython, relevant scripts, wearable technologies for Continuous Glucose Monitoring.	- he/she is able to describe the features of CircuitPython, to write simple code in CircuitPython and to describe current options for Continuous Glucose Monitoring.	- he/she has developed expertise in key and emerging areas of wearable technologies like programming miniature boards with CircuitPython and Continuous Glucose Monitoring.

ECVET points: 2

Checklist for students

BEFORE STARTING THE CASE STUDY	YES	NO
I read the case study instructions carefully		
I know which INDEX courses/modules are involved in the case study		

I have the necessary prerequisites		
I understand the case study description		
I understand what I must do to properly accomplish the task		
I know what I need to perform the task (tools/resources)		
I understand the deadline for delivery of the case study		
I have estimated the deadline for delivery of the case study		
I understand how to deliver the project		
I understand the assessment criteria		
I am aware of the ECVET points I can achieve		

If you have marked some of the above “no”, read the guidelines again, or feel free to contact the trainer.

Submit the assignment

Assemble and upload a portfolio containing text and code

Portfolio Upload

INDUSTRIAL EXPERT INDEX

This assignment has several steps. In the first step, you'll provide a response to the prompt. The other steps appear below the Your Response field.

Enter your response to the prompt. You can save your progress and return to complete your response at any time before the due date (Monday, Jan 1, 2029 01:00 CET). After you submit your response, you cannot edit it.

When ready, upload your files

4. Chirp: protocols and transducers for data over sound, and all optical acoustic transceivers

Prerequisites

Have successfully passed the following courses:

- INDEX Basic course
- INDEX Intermediate level courses:
    - IoT
    - Sensors and Automation

Case Study Description

Until the beginning of 2020, Dr James Andrew Nesfield was CEO and CTO of a company named Chirp Ltd for the deployment of data over sound by enabling devices and machines to send data to each other over the air using just their loudspeakers and microphones. Chirp was developed at the Computer Science Dept of University College London in 2011, and joined Sonos Inc. in 2020. The concept of data over sound can be a remarkable alternative in various scenarios, such as contexts where the use of wireless radio networks may be problematic like e.g. in industrial facilities and hospitals. The case of hospitals is particularly extreme as some environments are even incompatible with any metal part whatsoever, such as MRI rooms. In these cases, the conventional kind of piezoelectric technologies for loudspeakers and microphones may be restricted as well, and so innovative transducers may be needed.

Co-funded by the
Erasmus+ Programme
of the European Union

INDUSTRIAL EXPERT INDEX

Figure: Sketch of the general principle of data over sound. Source: CC BY-SA by INDEX consortium.

What the student should do

Carry out the following tasks:

1. Consider US20190237091A1 patent by Dr James Andrew Nesfield and Dr Daniel John Jones entitled "A method and system for acoustic communication of data". Write an essay answering the following questions: what is the main field of this invention, within the framework of the OSI model? What specific problems does it address? What solutions does it implement, in simple words?
2. Now that you have understood the basics of this invention, focus on a physical-layer transceiver that may support its implementation in problematical contexts like MRI rooms. In particular, consider the case of all-optical technologies where light may be transported through fibre optic bundles. For instance, loudspeakers may be built on the photoacoustic principle, and microphones may be based on various models of optical resonators. Download the article doi:10.3390/app7010025, which reviews the application of these technologies in the realm of medical ultrasonography, and write an essay answering the following questions: can they be relevant to the case of data over sound, in principle? What is the operating

principle of photoacoustic loudspeakers and optical microphones? What are their bandwidth and sensitivity with respect to piezoelectric devices?

Case study features

- A text from 20k to 30k characters.

Time required for the realization: 20 hours.

Presentation requirements

Free format: the student can choose the format that best describes the type of case study he/she is developing as long as he/she respects the above-mentioned features.

Tools & resources

To complete the case study the student will need:

- Any text editor;
- Access to the Internet.

Assessment criteria

	very uninnovative			very innovative
1. Innovativeness of the proposed solution	0	1	2	3

	less than 1 content			a various mixture of content
2. Ability to use the content from the courses involved	0	1	2	3
	less than 1 technology			a various mixture of technologies
3. Ability to apply the technologies presented in the courses involved	0	1	2	3
	very unclear			very clear
4. Clarity of the content	0	1	2	3
	very superficial			very deep
5. Quality of the content	0	1	2	3
	very poor			very precise

6. Use of appropriate technical language	0	1	2	3
	very unorganized and not structured			very organised and well structured
7. General organisation/structure	0	1	2	3

Learning outcome & ECVET points

Knowledge	Skills	Competence
- he/she has knowledge of data over sound and relevant protocols, photoacoustic loudspeakers and optical microphones.	- he/she is able to to describe the implementation of data over sound, to assess the relevance of cutting-edge alternatives of loudspeakers and of microphones.	- he/she has developed expertise in innovative link layer protocols like data over sound as well as innovative sensors and actuators for their implementation at the level of the physical sublayer.

Co-funded by the
Erasmus+ Programme
of the European Union

INDUSTRIAL EXPERT INDEX

ECVET points: 2

Checklist for students

BEFORE STARTING THE CASE STUDY	YES	NO
I read the case study instructions carefully		
I know which INDEX courses/modules are involved in the case study		
I have the necessary prerequisites		
I understand the case study description		
I understand what I must do to properly accomplish the task		
I know what I need to perform the task (tools/resources)		
I understand the deadline for delivery of the case study		
I have estimated the deadline for delivery of the case study		
I understand how to deliver the project		

I understand the assessment criteria		
I am aware of the ECVET points I can achieve		

If you have marked some of the above “no”, read the guidelines again, or feel free to contact the trainer.

Submit the assignment

Assemble and upload a portfolio containing text and code

Portfolio Upload

This assignment has several steps. In the first step, you'll provide a response to the prompt. The other steps appear below the Your Response field.

Enter your response to the prompt. You can save your progress and return to complete your response at any time before the due date (Monday, Jan 1, 2029 01:00 CET). After you submit your response, you cannot edit it.

When ready, upload your files

INDUSTRIAL EXPERT INDEX

PORTFOLIO UPLOAD

This assignment has several steps. In the first step, you'll provide a response to the prompt. The other steps appear below the **Your Response** field.

IN PROGRESS

1 **Your Response** due Jan 1, 2029 01:00 CET (in 7 years, 2 months)

Enter your response to the prompt. You can save your progress and return to complete your response at any time before the due date (Monday, Jan 1, 2029 01:00 CET). **After you submit your response, you cannot edit it.**

The prompt for this section

When ready, upload your files

File Uploads (Required)

Dateien auswählen Keine Datei ausgewählt Supported file types: .pdf, .gif, .jpg, .jpgeg, .jfif, .pjpeg, .pjp, .png Upload files

You may continue to work on your response until you submit it.

Submit your response and move to the next step

NOT AVAILABLE

2 Staff Grade

Your Grade: Not Started

5. E-Trim: Modular charging station start-up

Prerequisites

Have successfully passed the following courses:

- INDEX Basic course
- INDEX Intermediate level courses:
  - IoT
  - Additive Manufacturing
  - Entrepreneurship, Technology and Restructuring Management (E-TRIM)

Case Study Description

INDUSTRIAL EXPERT INDEX

DigiLife is a start-up founded by two engineers that developed a modular charging station for daily used devices (smartphone, earplugs, headphones, smartwatch) and is willing to sell the product to individual consumers. The company is in the seed phase. Ideas about the company's main characteristics are being ideated.

What the student should do

Please, write a report from 20k to 40k characters covering the following issues related to your ideas for DigiLife:

1. Legal form of the company with justification and:

- related registration procedure,
- the size of the capital needed for start,
- the list of documents needed to register a company,
- the rights and responsibilities of business owners.

2. The structure of the company including:

- structure of management,
- divisions or subdivisions and their tasks,
- number of employees in each (sub) division and their responsibilities,
- interdependencies between positions and departments.

3. The HR strategy including:

- methods and sources of recruitment and its contribution to the company's goals, mission and vision,
- competences which are needed in individual job positions
- recruitment techniques and how they will ensure hiring proper employees
- performance appraisal and reward system and its contribution to company's goals,
- company's attitude towards employees training and career development,

- mechanisms of employee involvement.

Case study features

An essay from 20k to 40k characters.

Time required for the realization: 20 hours.

Presentation requirements

Free format: the student can choose the format that best describes the type of case study he/she is developing as long as he/she respects the above-mentioned features.

Tools & resources

To complete the case study the student will need to do a desk research on the basis of widely available data on the Internet using a computer and text processor.

Assessment criteria

	very uninnovative			very innovative
1. Innovativeness of the proposed solution	0	1	2	3
	less than 1 content			a various mixture of content

2. Ability to use the content from the courses involved	0	1	2	3
	less than 1 technology			a various mixture of technologies
3. Ability to apply the technologies presented in the courses involved	0	1	2	3
	very unclear			very clear
4. Clarity of the content	0	1	2	3
	very superficial			very deep
5. Quality of the content	0	1	2	3
	very poor			very precise
6. Use of appropriate technical language	0	1	2	3

	very unorganis ed and not structured			very organised and well structured
7. General organisation/structure	0	1	2	3

Learning outcome & ECVET points

Knowledge	Skills	Competence
- he/she has knowledge of relationship between human resources and business profitability - he/she has knowledge of organisational structures and their characteristics - he/she has knowledge of key fields of human resource management	- he/she is able to plan and manage key human resource functions within organisation - he/she is able to shape employee performance management	- he/she has developed a proactive attitude towards company's structure design - he/she demonstrates the responsibility for proper employees management with regard to company's mission

ECVET points: 2

Co-funded by the
Erasmus+ Programme
of the European Union

INDUSTRIAL EXPERT INDEX

Checklist for students

BEFORE STARTING THE CASE STUDY	YES	NO
I read the case study instructions carefully		
I know which INDEX courses/modules are involved in the case study		
I have the necessary prerequisites		
I understand the case study description		
I understand what I must do to properly accomplish the task		
I know what I need to perform the task (tools/resources)		
I understand the deadline for delivery of the case study		
I have estimated the deadline for delivery of the case study		
I understand how to deliver the project		
I understand the assessment criteria		

INDUSTRIAL EXPERT INDEX

I am aware of the ECVET points I can achieve		

If you have marked some of the above “no”, read the guidelines again, or feel free to contact the trainer.

Submit the assignment

Assemble and upload a portfolio containing text and code

Portfolio Upload

This assignment has several steps. In the first step, you'll provide a response to the prompt. The other steps appear below the Your Response field.

Enter your response to the prompt. You can save your progress and return to complete your response at any time before the due date (Monday, Jan 1, 2029 01:00 CET). After you submit your response, you cannot edit it.

When ready, upload your files

INDUSTRIAL EXPERT INDEX

PORTFOLIO UPLOAD

This assignment has several steps. In the first step, you'll provide a response to the prompt. The other steps appear below the **Your Response** field.

IN PROGRESS

1 **Your Response** due Jan 1, 2029 01:00 CET (in 7 years, 2 months)

Enter your response to the prompt. You can save your progress and return to complete your response at any time before the due date (Monday, Jan 1, 2029 01:00 CET). **After you submit your response, you cannot edit it.**

The prompt for this section

When ready, upload your files

File Uploads (Required)

Dateien auswählen Keine Datei ausgewählt Supported file types: .pdf, .gif, .jpg, .jpgeg, .jfif, .pjpeg, .pjp, .png Upload files

You may continue to work on your response until you submit it.

Submit your response and move to the next step

NOT AVAILABLE

2 Staff Grade

Your Grade: Not Started

6. E-Trim: Marketing analysis for automatic window closing mechanism

Prerequisites

Have successfully passed the following courses:

- INDEX Basic course
- INDEX Intermediate level courses:
  - IoT
  - Additive Manufacturing
  - Entrepreneurship, Technology and Restructuring Management (E-TRIM)

Case Study Description

The following figure shows the prototype of a window closing mechanism. The aim of this project is to make it possible for the window to get opened manually in the morning – for example before going to work – and then it automatically closes if there is a risk of rain Therefore, a system is developed which checks weather forecasts over WiFi at regular intervals, and when t ahe chance of rain exceeds a certain threshold, it triggers a linear actuator that closes the window. The system is mounted at the window. Therefore, there is a casing created by additive manufacturing to fit the chosen components. There is already an established company which intends to enter the market with this product.

Figure 1. 3D model of the window closing mechanism. Source: S. Markus/Hochschule Düsseldorf.

INDUSTRIAL EXPERT INDEX

What the student should do

Assume a target market (individual consumer/ window producers/ window assembly companies) in a given country. Please, write a report from 20k to 40k characters covering the following issues describing the environment of the company selling the above described product:

- PESTLE analysis regarding main macroeconomic issues which can affect the demand for the product (political, economic, social, technological, legal, environmental). At the beginning of the analysis, please remember to define the target country where you are going to sell the product.
- Five forces analysis which takes into consideration: threat of entry, the power of buyers, the power of suppliers, the threat of substitutes, and competitive rivalry. At the beginning of the analysis, please remember to define the target country where you are going to sell the product. Remember to include necessary statistical data (ex. Eurostat).
- Conclusions covering evaluation of profitability of the product in light of the studies' findings. Please, in the conclusions, list the main factors which affect the profit in positive and negative ways .

Case study features

An essay from 20k to 40k characters.

Time required for the realization: 20 hours.

Presentation requirements

Free format: The student can choose the format that best describes the type of case study he/she is developing as long as he/she respects the above-mentioned features.

Tools & resources

To complete the case study the student will need to do a desk research on the basis of widely available data on the Internet using a computer and text processor.

INDUSTRIAL EXPERT INDEX

Assessment criteria

	very uninnovative			very innovative
1. Innovativeness of the proposed solution	0	1	2	3
	less than 1 content			a various mixture of content
2. Ability to use the content from the courses involved	0	1	2	3
	less than 1 technology			a various mixture of technologies
3. Ability to apply the technologies presented in the courses involved	0	1	2	3
	very unclear			very clear
4. Clarity of the content	0	1	2	3

	very superficial			very deep
5. Quality of the content	0	1	2	3
	very poor			very precise
6. Use of appropriate technical language	0	1	2	3
	very unorganised and not structured			very organised and well structured
7. General organisation/structure	0	1	2	3

Learning outcome & ECVET points

Knowledge	Skills	Competence

- he/she has knowledge of basic economic analysis with regard to macro and task environment of a company - he/she has knowledge of the relationships between the company's environment and its profitability - he/she has knowledge of factors affecting the demand for a product	- he/she is able to conduct basic market analysis of a company or a product - he/she is able to identify main drivers of a demand for a product - he/she is able to evaluate the profitability of a new product	- he/she has developed an proactive attitude towards external factors affecting the profitability of a project - he/she has developed a sense of responsibility for business decisions with regard to external factors

ECVET points: 2

Checklist for the students

BEFORE STARTING THE CASE STUDY	YES	NO
I read the case study instructions carefully		
I know which INDEX courses/modules are involved in the case study		

I have the necessary prerequisites		
I understand the case study description		
I understand what I must do to properly accomplish the task		
I know what I need to perform the task (tools/resources)		
I understand the deadline for delivery of the case study		
I have estimated the deadline for delivery of the case study		
I understand how to deliver the project		
I understand the assessment criteria		
I am aware of the ECVET points I can achieve		

If you have marked some of the above “no”, read the guidelines again, or feel free to contact the trainer.

Submit the assignment

Assemble and upload a portfolio containing text and code

Portfolio Upload

This assignment has several steps. In the first step, you'll provide a response to the prompt. The other steps appear below the Your Response field.

Enter your response to the prompt. You can save your progress and return to complete your response at any time before the due date (Monday, Jan 1, 2029 01:00 CET). After you submit your response, you cannot edit it.

When ready, upload your files

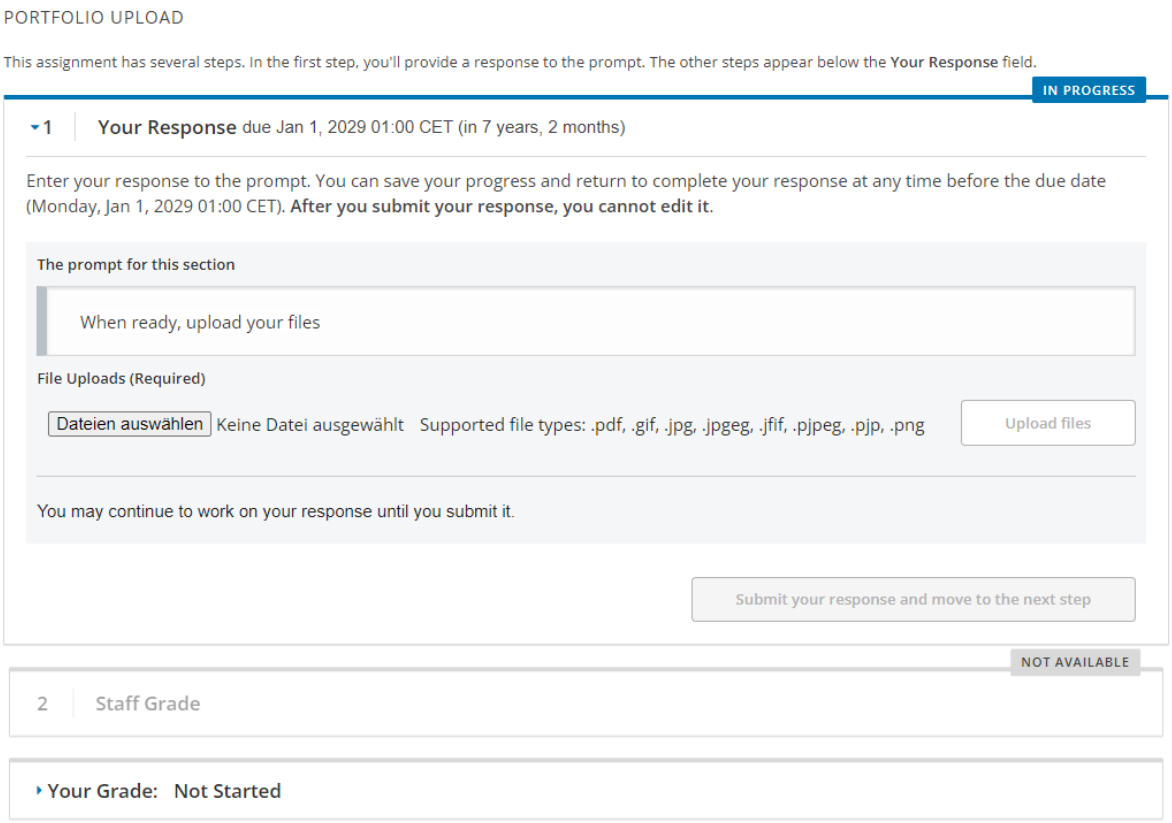

7. E-Trim: Business plan for innovative solution in continuous groundwater monitoring

Prerequisites

Have successfully passed the following courses:

- INDEX Basic course

- INDEX Intermediate level courses:
    - IoT
    - Sensors and Automation
    - Entrepreneurship, Technology and Restructuring Management (E-TRIM)

Case Study Description

Increasing periods of drought as a result of climate change can cause serious problems in many European countries, leading to massive damage. Most of the damage occurs in urban areas, involving infrastructure works and buildings, mainly affecting underground foundations. Rural areas are also severely affected, as crops deteriorate and soil quality declines.

An important problem is that property owners do not know the groundwater level on their property and have little ability to influence this. This is because groundwater levels are affected by many external factors such as buildings, structures, amounts of rain and drought, etc.

Measuring groundwater levels is now usually done before infrastructure is built. This involves placing a hollow pipe in the ground and using a ruler (usually a metal strip) to determine the water level in the pipe. This measurement has to be done by a human and is a one-off, making it expensive and far from continuous.

The premise of the project is to build a business marketing an innovation in the form of a sensor that can be installed on top of current hollow pipes to measure groundwater levels continuously or semi-continuously (once a day). This value is automatically transmitted to a central data centre where data from multiple sensors is collected and a map of the groundwater level at any given time is created and provides insight into changes in that level.

What the student should do

Please write a 20k to 40k character report covering the main points of your business plan for a new venture based on implementation of the continuous groundwater monitoring systems described

above. This new company will only target the farm market. At the beginning of the analysis, please remember to define the target country/countries where you are going to sell the product.

Due to the limited size of the report, please concentrate on the following parts of the business plan:

1. Cover page (1 page)
2. Summary of the business plan - executive summary (1- 1.5 pages)
3. Characteristics of the project and products (1-2 pages)
4. Market and competition (2-4 pages)
5. Marketing and sales strategy (1.5-3 pages)
6. Organisational plan (1-1.5 pages)
7. Characteristics of the management and personnel (1 page)
8. SWOT analysis (2-3 pages)

Please omit the financial analysis of the planned venture in the report.

Case study features

An essay from 20k to 40k characters.

Time required for the realization: 20 hours.

Presentation requirements

Free format: The student can choose the format that best describes the type of case study he/she is developing as long as he/she respects the above-mentioned features.

Tools & resources

To complete the case study the student will need to do a desk research on the basis of widely available data on the Internet using a computer and text processor.

Assessment criteria

	very uninnovative			very innovative
1. Innovativeness of the proposed solution	0	1	2	3
	less than 1 content			a various mixture of content
2. Ability to use the content from the courses involved	0	1	2	3
	less than 1 technology			a various mixture of technologies
3. Ability to apply the technologies presented in the courses involved	0	1	2	3
	very unclear			very clear
4. Clarity of the content	0	1	2	3
	very superficial			very deep

5. Quality of the content	0	1	2	3
	very poor			very precise
6. Use of appropriate technical language	0	1	2	3
	very unorganised and not structured			very organised and well structured
7. General organisation/structure	0	1	2	3

Learning outcome & ECVET points

· Knowledge	Skills	Competence

- has knowledge of the principles of building a business plan for a new innovative enterprise - has knowledge of basic economic analysis with regard to environment of a company - has knowledge of the relationships between the business plan elements	- can carry out a basic market analysis of the company or product - can prepare a description of the various components of a new business - can include product, market and organisational conditions in the conception of the new business	- develop a proactive attitude towards the constituent factors of the new business concept - develop a sense of responsibility for business decisions in relation to the coherence of the business concept

ECVET points: 2

Checklist for students

BEFORE STARTING THE CASE STUDY	YES	NO
I read the case study instructions carefully		
I know which INDEX courses/modules are involved in the case study		
I have the necessary prerequisites		

I understand the case study description		
I understand what I must do to properly accomplish the task		
I know what I need to perform the task (tools/resources)		
I understand the deadline for delivery of the case study		
I have estimated the deadline for delivery of the case study		
I understand how to deliver the project		
I understand the assessment criteria		
I am aware of the ECVET points I can achieve		

If you have marked some of the above "no", read the guidelines again, or feel free to contact the trainer.

Submit the assignment

Assemble and upload a portfolio containing text and code

Portfolio Upload

This assignment has several steps. In the first step, you'll provide a response to the prompt. The other steps appear below the Your Response field.

Enter your response to the prompt. You can save your progress and return to complete your response at any time before the due date (Monday, Jan 1, 2029 01:00 CET). After you submit your response, you cannot edit it.

When ready, upload your files

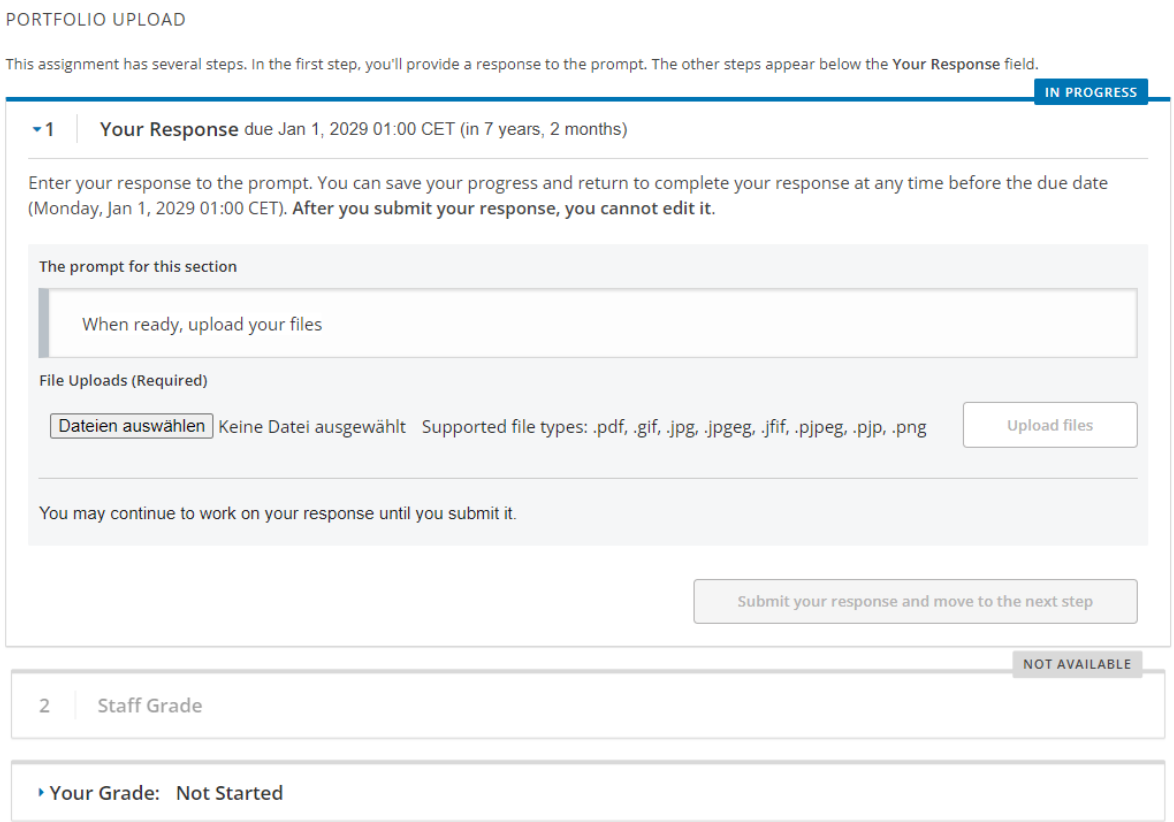

8. E-Trim: Marketing analysis for smartphone holder for a bicycle

Prerequisites

Have successfully passed the following courses:

- INDEX Basic course
- INDEX Intermediate level courses:
    - IoT

- Additive Manufacturing
- Entrepreneurship, Technology and Restructuring Management (E-TRIM)

Case Study Description

The picture below shows a prototype of a mobile phone holder for a bicycle. The aim of this project is to be able to charge a mobile phone using the energy provided by the dynamo. Because the dynamo is a very unstable power source, it was necessary to integrate a battery that acts as a buffer. Thereby the mobile phone can be charged uniformly. In order to achieve an even charging process, a sensor was also needed to check the state of charge of the battery. This data is transmitted on to the microcontroller, which decides whether or not the accu is charged enough to activate the phone's charging process.

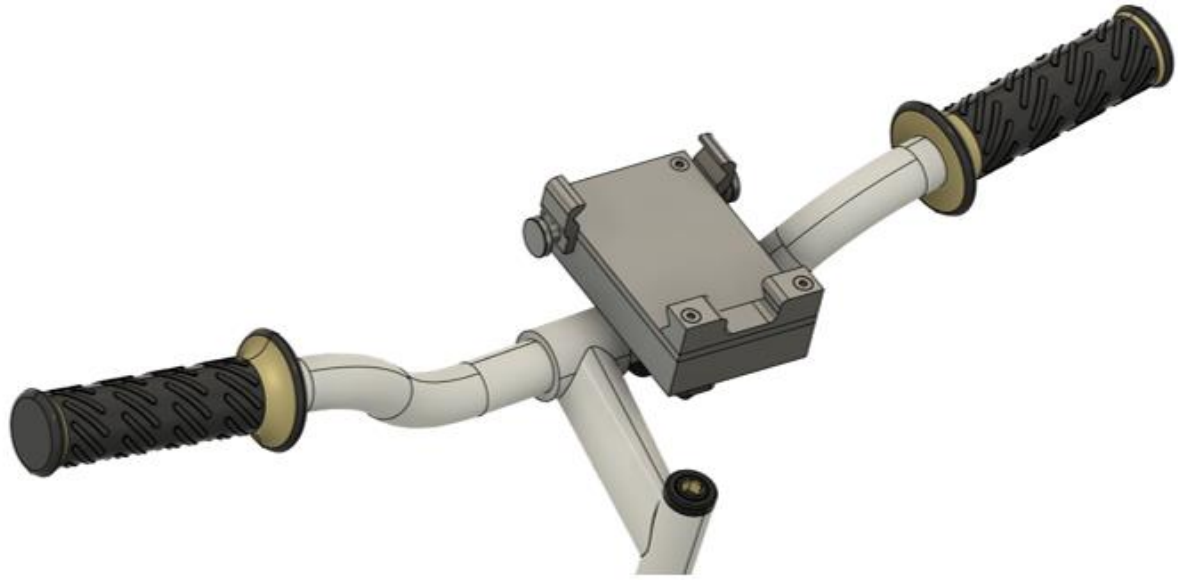

Figure 1. 3D model of the phone holder. Source: S. Markus/Hochschule Düsseldorf.

What the student should do

Assume a target market (individual consumer) in a given country. Please, write a report from 20k to 40k characters covering the following issues describing the environment of the company selling the above described product:

- PESTLE analysis regarding main macroeconomic issues which can affect the demand for the product (political, economic, social, technological, legal, environmental). At the beginning of the analysis, please remember to define the target country where you are going to sell the product.
- Five forces analysis which takes into consideration: threat of entry, the power of buyers, the power of suppliers, the threat of substitutes, and competitive rivalry. At the beginning of the analysis, please remember to define the target country where you are going to sell the product. Remember to include necessary statistical data (ex. Eurostat).
- Conclusions covering evaluation of profitability of the product in the light of the studies' findings. Please, in the conclusions, list the main factors which affect the profit in positive and negative ways.

Case study features

An essay from 20k to 40k characters.

Time required for the realization: 20 hours.

Presentation requirements

Free format: The student can choose the format that best describes the type of case study he/she is developing as long as he/she respects the above-mentioned features.

Tools & resources

To complete the case study the student will need to do a desk research on the basis of widely available data on the Internet using a computer and text processor.

Assessment criteria

	very uninnovative			very innovative
1. Innovativeness of the proposed solution	0	1	2	3
	less than 1 content			a various mixture of content
2. Ability to use the content from the courses involved	0	1	2	3
	less than 1 technology			a various mixture of technologies
3. Ability to apply the technologies presented in the courses involved	0	1	2	3
	very unclear			very clear
4. Clarity of the content	0	1	2	3
	very superficial			very deep

5. Quality of the content	0	1	2	3
	very poor			very precise
6. Use of appropriate technical language	0	1	2	3
	very unorganised and not structured			very organised and well structured
7. General organis ation/structure	0	1	2	3

Learning outcome & ECVET points

Knowledge	Skills	Competence

- he/she has knowledge of basic economic analysis with regard to macro and task environment of a company - he/she has knowledge of the relationships between the company's environment and its profitability - he/she has knowledge of factors affecting the demand for a product	- he/she is able to conduct basic market analysis of a company or a product - he/she is able to identify main drivers of a demand for a product - he/she is able to evaluate the profitability of a new product	- he/she has developed an proactive attitude towards external factors affecting the profitability of a project - he/she has developed a sense of responsibility for business decisions with regard to external factors

ECVET points: 2

Checklist for students

BEFORE STARTING THE CASE STUDY	YES	NO
I read the case study instructions carefully		
I know which INDEX courses/modules are involved in the case study		

I have the necessary prerequisites		
I understand the case study description		
I understand what I must do to properly accomplish the task		
I know what I need to perform the task (tools/resources)		
I understand the deadline for delivery of the case study		
I have estimated the deadline for delivery of the case study		
I understand how to deliver the project		
I understand the assessment criteria		
I am aware of the ECVET points I can achieve		

If you have marked some of the above “no”, read the guidelines again, or feel free to contact the trainer.

Submit the assignment

Assemble and upload a portfolio containing text and code

Portfolio Upload

This assignment has several steps. In the first step, you'll provide a response to the prompt. The other steps appear below the Your Response field.

Enter your response to the prompt. You can save your progress and return to complete your response at any time before the due date (Monday, Jan 1, 2029 01:00 CET). After you submit your response, you cannot edit it.

When ready, upload your files

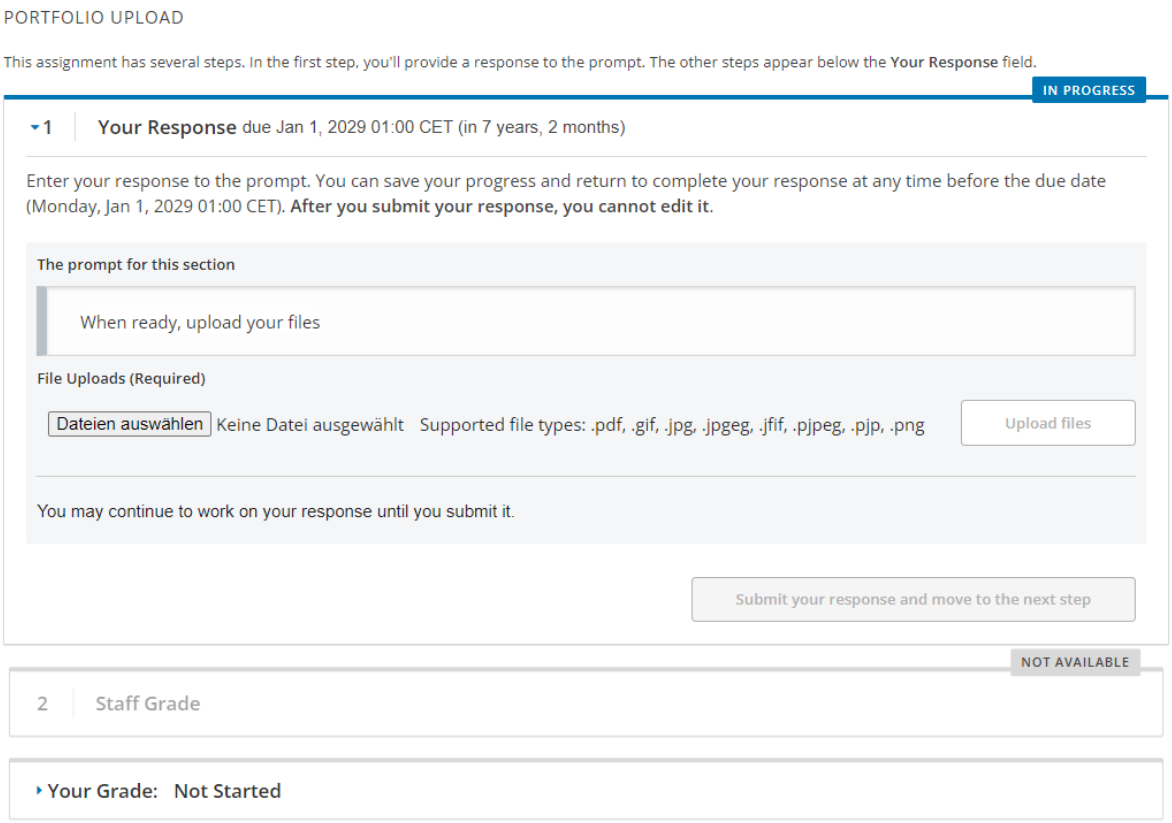

9. AM and IoT: Smartphone holder for a bicycle with integrated charging function actuated via Bluetooth

Prerequisites

Have successfully passed the following courses:

- INDEX Basic course
- INDEX Intermediate level courses:
    - Additive Manufacturing
    - Internet of Things

Case Study Description

The following figure shows the prototype of a smartphone holder for a bicycle. The supplied CAD models can be seen as a functional prototype. The first print is used for a functionality test. The aim of this project is to create a phone holder that can charge a smartphone through the energy produced from a dynamo. However, since a dynamo is an inconstant power supply, a battery must be integrated to serve as a buffer and ensure constant recharging. Charging is realized wirelessly through the QI standard (e.g. https://www.adafruit.com/product/2162). It is desired that charging automatically begins as soon as the battery level falls below 15%, and stops above 99%, or otherwise whenever a user manually decides to start or discontinue the process through an app.

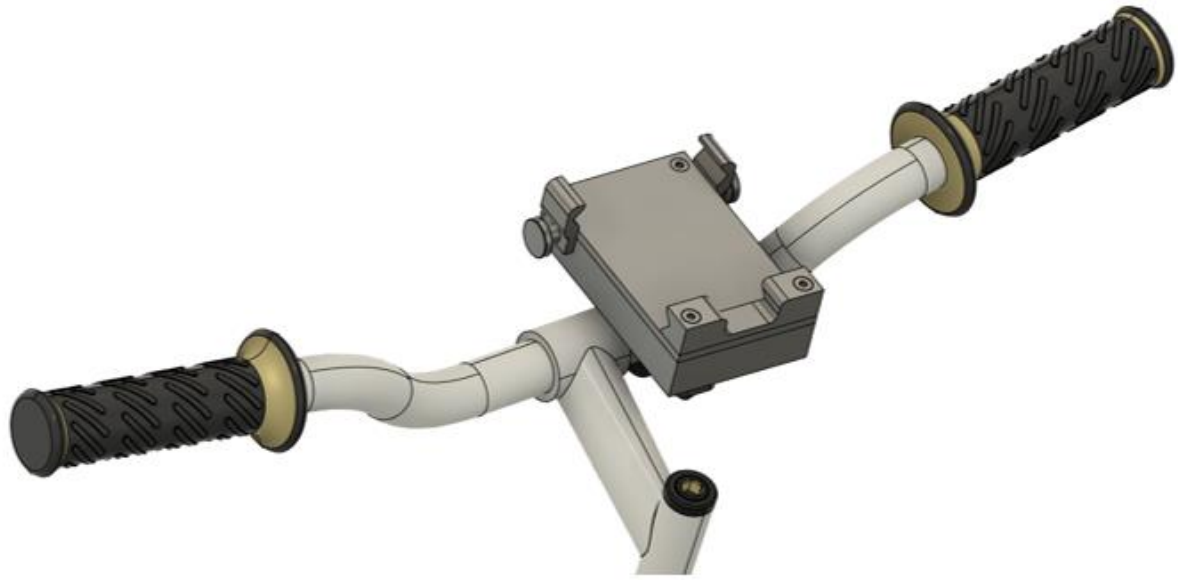

Figure 1. 3D model of the phone holder. Source: S. Markus/Hochschule Düsseldorf.

What the student should do

Do the pre processing for printing the first parts of the functional model and develop a system that allows you to charge your smartphone on your bicycle through the power of a dynamo, and at the same time guarantee that the battery of your smartphone is charged in an optimal manner, whenever needed or desired.

1. Open the provided CAD model with Fusion 360 and export the lower clamp, the case and the cover as STL-files and make a reasoned choice for the export settings. Furthermore, explain why FDM is a suitable process for this project. Take into account at what stage of development the project is.
2. Import the STL-files in Cura and do the preprocessing settings. All parts should be printed at the same time. Export the file to 3mf-format. Explain which settings you made and what is generally important while preprocessing the model.
3. Provide an overall description of the electronic components and the connectivity options that you may implement to finalis e this project from the dynamo, to the battery, to the QI transmitter and its control system. In particular, consider that the working distance of the QI transmitter may be below about 1 cm, and so your device needs to work only when your smartphone is mounted on your bicycle, in practice.
4. Suppose that you have decided to use an Arduino-compatible board in order to control the QI transmitter, and that you have set the following variables: int batteryLevel stores the battery level read from your smartphone; bool qiState is a state variable that may be visualized and toggled from your app. Write the blocks of C++ code that ensures that charging automatically begins as soon as the battery level falls below 15%, and stops above 99%, or otherwise may be modified from your dashboard.

Case study features

A text from 10k to 20k characters, an STL-file with export settings and a Cura-file with all preprocessing settings.

Time required for the realization: 20 hours.

Co-funded by the
Erasmus+ Programme
of the European Union

INDUSTRIAL EXPERT INDEX

Presentation requirements

Free format: the student can choose the format that best describes the type of case study he/she is developing as long as he/she respects the above-mentioned features.

Tools & resources

To complete the case study the student will need to:

- Download and process the enclosed phone holder, by using Fusion 360 and Cura (Choose "Ultimaker 2 Extended +" as a printer);
- Watch the introduction video to Fusion 360;
- Do a web search.

Assessment criteria

	very uninnovative			very innovative
1. Innovativeness of the proposed solution	0	1	2	3
	less than 1 content			a various mixture of content
2. Ability to use the content from the courses involved	0	1	2	3

	less than 1 technology			a various mixture of technologies
3. Ability to apply the technologies presented in the courses involved	0	1	2	3
	very unclear			very clear
4. Clarity of the content	0	1	2	3
	very superficial			very deep
5. Quality of the content	0	1	2	3
	very poor			very precise
6. Use of appropriate technical language	0	1	2	3
	very unorganis ed and not structured			very organis ed and well structured

7. General organis ation/structure	0	1	2	3

Learning outcome & ECVET points

Knowledge	Skills	Competence
He/she has knowledge of ... ● Managing CAD models ● All relevant AM processes ● Preprocessing settings for AM ● Managing IoT problems related to power and connectivity ● Developing a simple control logic	He/she is able to ... ● Prepare CAD models with Fusion 360 for printing ● Choose a suitable AM process for a specific project ● Do pre processing settings with a slicer ● Make a block diagram for hardware design ● Write a simple C++ code	he/she has developed ... ● The competence to evaluate if AM is suitable for a certain project ● The competence to assess if it is useful to implement AM in a particular process of product development ● The competence to design an electronic device at a high level ● The competence to address a simple control logic at a low level

ECVET points: 2

Co-funded by the
Erasmus+ Programme
of the European Union

INDUSTRIAL EXPERT INDEX

Checklist for students

BEFORE STARTING THE CASE STUDY	YES	NO
I read the case study instructions carefully		
I know which INDEX courses/modules are involved in the case study		
I have the necessary prerequisites		
I understand the case study description		
I understand what I must do to properly accomplish the task		
I know what I need to perform the task (tools/resources)		
I understand the deadline for delivery of the case study		
I have estimated the deadline for delivery of the case study		
I understand how to deliver the project		
I understand the assessment criteria		

INDUSTRIAL EXPERT INDEX

I am aware of the ECVET points I can achieve		

If you have marked some of the above “no”, read the guidelines again, or feel free to contact the trainer.

Submit the assignment

Assemble and upload a portfolio containing text and code

Portfolio Upload

This assignment has several steps. In the first step, you'll provide a response to the prompt. The other steps appear below the Your Response field.

Enter your response to the prompt. You can save your progress and return to complete your response at any time before the due date (Monday, Jan 1, 2029 01:00 CET). After you submit your response, you cannot edit it.

When ready, upload your files

INDUSTRIAL EXPERT INDEX

PORTFOLIO UPLOAD

This assignment has several steps. In the first step, you'll provide a response to the prompt. The other steps appear below the **Your Response** field.

IN PROGRESS

1 **Your Response** due Jan 1, 2029 01:00 CET (in 7 years, 2 months)

Enter your response to the prompt. You can save your progress and return to complete your response at any time before the due date (Monday, Jan 1, 2029 01:00 CET). **After you submit your response, you cannot edit it.**

The prompt for this section

When ready, upload your files

File Uploads (Required)

Dateien auswählen Keine Datei ausgewählt Supported file types: .pdf, .gif, .jpg, .jpgeg, .jfif, .pjpeg, .pjp, .png Upload files

You may continue to work on your response until you submit it.

Submit your response and move to the next step

NOT AVAILABLE

2 Staff Grade

Your Grade: Not Started

10. AM and IoT: Automatic window closing mechanism actuated by weather API

Prerequisites

Have successfully passed the following courses:

- INDEX Basic course
- INDEX Intermediate level courses:
    - Additive Manufacturing
    - Internet of Things

Case Study Description

The following figure shows the prototype of a window closing mechanism. The aim of this project is to make it possible to open a window manually and then close it automatically when rain is forecast. To do this, a system must be developed that checks the weather forecast via Wi-Fi at regular intervals. If a certain chance of rain is overstepped, a linear actuator should then be triggered to close the window. In addition, the system must be mounted on the window. This requires a housing, created using additive manufacturing, into which the selected components fit.

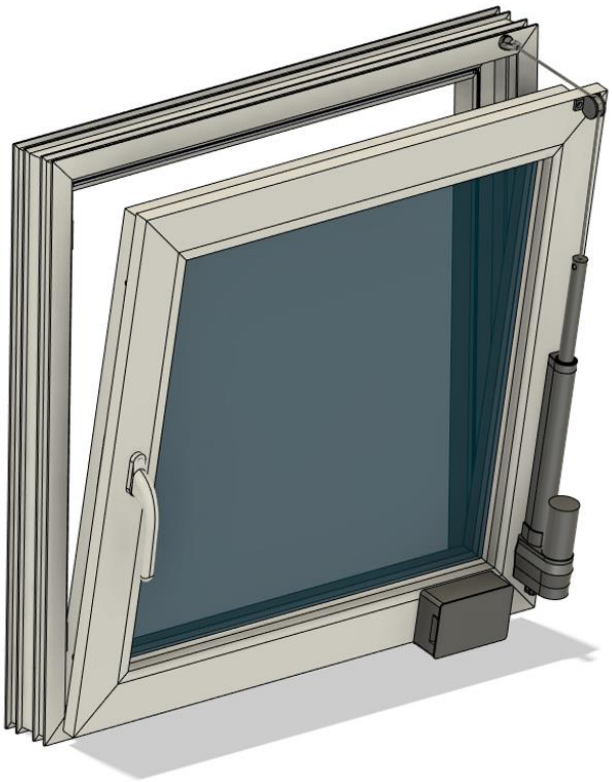

Figure 1. 3D model of the window closing mechanism. Source: S. Markus/Hochschule Düsseldorf.

What the student should do

Develop a system that automatically closes a window according to a weather forecast obtained from the Internet. Use a microcontroller in combination with a Wi-Fi module. This controls a linear motor that pulls on a cable that is guided over a pulley.

1. First focus on the electronic components. List the hardware components needed to interface to the linear actuator and an existing Wi-Fi network, by placing particular attention on the implementation of the power supply.
2. Describe in words the firmware needed to interface to a web service like OpenWeatherMap and actuate your window when the chance of rain exceeds a certain threshold, by considering the following questions: what stack of Internet protocols to use? How to obtain the desired information? How to process it? Hint: you may request an hourly forecast as a JSON file and parse any key related to the probability of precipitation, see https://openweathermap.org/api/one-call-api.
3. Open the provided CAD model with Fusion 360 and export the Case, the cover and the one clip as STL-files and make a reasoned choice for the export settings. Furthermore, explain why FDM is a suitable process for this project.
4. Import the STL-files in Cura and do the preprocessing settings. All parts should be printed at the same time. Export the file to 3mf-format. Explain which settings you made and what is generally important while preprocessing the model.

Case study features

A text from 10k to 20k characters, a STL-file with export settings and a Cura-file with all preprocessing settings.

Time required for the realization: 20 hours.

Presentation requirements

Free format: t he student can choose the format that best describes the type of case study he/she is developing as long as he/she respects the above-mentioned features.

Tools & resources

To complete the case study the student will need to:

- Download and process the enclosed example of a box, by using Fusion 360 and Cura (Choose "Ultimaker 2 Extended +" as a printer);
- Watch the introduction video to Fusion 360;
- Do a web search.

Assessment criteria

	very uninnovative			very innovative
1. Innovativeness of the proposed solution	0	1	2	3
	less than 1 content			a various mixture of content
2. Ability to use the content from the courses involved	0	1	2	3
	less than 1 technology			a various mixture of technologies
3. Ability to apply the technologies presented in the courses involved	0	1	2	3

	very unclear			very clear
4. Clarity of the content	0	1	2	3
	very superficial			very deep
5. Quality of the content	0	1	2	3
	very poor			very precise
6. Use of appropriate technical language	0	1	2	3
	very unorganised and not structured			very organised and well structured
7. General organisation/structure	0	1	2	3

Co-funded by the
Erasmus+ Programme
of the European Union

INDUSTRIAL EXPERT INDEX

Learning outcome & ECVET points

Knowledge	Skills	Competence
He/she has knowledge of ... ● Managing CAD models ● All relevant AM processes ● Preprocessing settings for AM ● Problems related to the integration of high-torque motors in an IoT project ● Problems related to the integration of external APIs in an IoT project	He/she is able to ... ● Prepare CAD models with Fusion 360 for printing ● Choose a suitable AM process for a specific project ● Do pre processing settings with a slicer ● Design the circuitry needed to drive high-torque motors ● Design a strategy to use machine-processable info available online	he/she has developed ... ● The competence to evaluate if AM is suitable for a certain project ● The competence to assess if it is useful to implement AM in a particular process of product development ● The competence to identify the electronic components suitable for an actuation project ● The competence to identify the blocks needed to integrate external APIs in an IoT project

ECVET points: 2

Co-funded by the
Erasmus+ Programme
of the European Union

INDUSTRIAL EXPERT INDEX

Checklist for students

BEFORE STARTING THE CASE STUDY	YES	NO
I read the case study instructions carefully		
I know which INDEX courses/modules are involved in the case study		
I have the necessary prerequisites		
I understand the case study description		
I understand what I must do to properly accomplish the task		
I know what I need to perform the task (tools/resources)		
I understand the deadline for delivery of the case study		
I have estimated the deadline for delivery of the case study		
I understand how to deliver the project		

I understand the assessment criteria		
I am aware of the ECVET points I can achieve		

If you have marked some of the above “no”, read the guidelines again, or feel free to contact the trainer.

Submit the assignment

Assemble and upload a portfolio containing text and code

Portfolio Upload

This assignment has several steps. In the first step, you'll provide a response to the prompt. The other steps appear below the Your Response field.

Enter your response to the prompt. You can save your progress and return to complete your response at any time before the due date (Monday, Jan 1, 2029 01:00 CET). After you submit your response, you cannot edit it.

When ready, upload your files

INDUSTRIAL EXPERT INDEX

PORTFOLIO UPLOAD

This assignment has several steps. In the first step, you'll provide a response to the prompt. The other steps appear below the **Your Response** field.

IN PROGRESS

1 **Your Response** due Jan 1, 2029 01:00 CET (in 7 years, 2 months)

Enter your response to the prompt. You can save your progress and return to complete your response at any time before the due date (Monday, Jan 1, 2029 01:00 CET). **After you submit your response, you cannot edit it.**

The prompt for this section

When ready, upload your files

File Uploads (Required)

Dateien auswählen Keine Datei ausgewählt Supported file types: .pdf, .gif, .jpg, .jpgeg, .jfif, .pjpeg, .pjp, .png Upload files

You may continue to work on your response until you submit it.

Submit your response and move to the next step

NOT AVAILABLE

2 Staff Grade

Your Grade: Not Started

11. AM and Sensors and Automation: Smartphone holder for a bicycle with integrated charging function actuated by sensor data

Prerequisites

Have successfully passed the following courses:

- INDEX Basic course
- INDEX Intermediate level courses:
    - Additive Manufacturing
    - Sensors and Automation

Case Study Description

The following figure shows the prototype of a smartphone holder for a bicycle. The CAD models already created can be seen as a functional prototype. The first print is used for a functionality test. The aim of this project is to create a phone holder that can charge your smartphone by utilising the energy supplied by a dynamo. Because of the fact that a dynamo is a very inconsistent power supply a battery must be integrated, that acts as a buffer. Thereby the smartphone can be charged uniformly . To realize a uniform charging process a sensor is also needed to check the charge of the buffer-battery. This data will be transmitted to a microcontroller that decides whether the battery is sufficiently charged to activate the phone charging process or not. Furthermore, when the smartphone's battery level is below 10%, the charging process is to be initialized. The end of charging should occur when the smartphone battery has reached 90% charge. Assume that a bicycle power charge controller is already mounted.

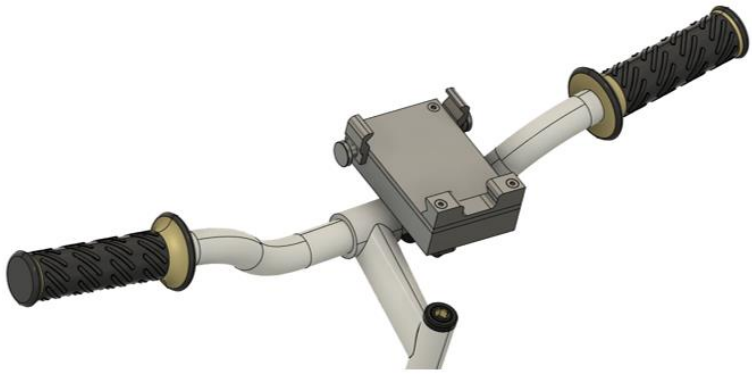

Figure 1. 3D model of the phone holder. Source: S. Markus/Hochschule Düsseldorf.

What the student should do

Do the preprocessing for printing the first parts of the functional model and develop a system that allows you to charge your smartphone on your bicycle by using the power of the dynamo and at the same time guarantee that the battery of the smartphone is charged uniformly by using an additional battery as a buffer. The charge of the buffer-battery must be monitored by a sensor:

1. Open the provided CAD model with Fusion 360 and export the lower clamp, the case and the cover as STL-files and make a reasoned choice for the export settings. Furthermore, explain

why FDM is a suitable process for this project. Take into account at what stage of development the project is.

2. Import the STL-files in Cura and do the preprocessing settings. All parts should be printed at the same time. Export the file to 3mf-format. Explain which settings you made and what is generally important while preprocessing the model.
3. Now focus on the electronic components. Look for electrical components that fit the dimensions of the printed parts. Use the Fusion 360 measuring tool to obtain the required dimensions. If you can't find components that fit, then explain how you would need to modify the printed parts. Create a sketch showing the positioning of the electrical components in the box.
4. Describe how to configure the electronic components so that the smartphone battery is uniformly charged by an additional battery as a buffer. Also create a wiring diagram and explain it.

Case study features

A text from 10k to 20k characters, a STL-file with export settings and a Cura-file with all preprocessing settings.

Time required for the realization: 20 hours.

Presentation requirements

Free format: The student can choose the format that best describes the type of case study he/she is developing as long as he/she respects the above-mentioned features.

Tools & resources

To complete the case study the student will need to:

- Download and process the enclosed phone holder, by using Fusion 360 and Cura (Choose “Ultimaker 2 Extended +” as a printer);

- Watch the introduction video to Fusion 360;
- Do a web search.

Assessment criteria

	very uninnovative			very innovative
1. Innovativeness of the proposed solution	0	1	2	3
	less than 1 content			a various mixture of content
2. Ability to use the content from the courses involved	0	1	2	3
	less than 1 technology			a various mixture of technologies
3. Ability to apply the technologies presented in the courses involved	0	1	2	3
	very unclear			very clear

4. Clarity of the content	0	1	2	3
	very superficial			very deep
5. Quality of the content	0	1	2	3
	very poor			very precise
6. Use of appropriate technical language	0	1	2	3
	very unorganis ed and not structured			very organis ed and well structured
7. General organis ation/structure	0	1	2	3

Learning outcome & ECVET points

Knowledge	Skills	Competence

He/she has knowledge of ... ● Managing CAD models ● All relevant AM processes ● Preprocessing settings for AM ● Various concepts/principles of different types of sensors	He/she is able to ... ● Prepare CAD models with Fusion 360 for printing ● Choose a suitable AM process for a specific project ● Do pre processing settings with a slicer ● Select and configure proper electronic components/sensors	he/she has developed ... ● The competence to evaluate if AM is suitable for a certain project ● The competence to assess if it is useful to implement AM in a particular process of product development ● The ability to properly apply a certain type of electronic component/sensor for this particular application

ECVET points: 2

Checklist for students

BEFORE STARTING THE CASE STUDY	YES	NO

I read the case study instructions carefully		
I know which INDEX courses/modules are involved in the case study		
I have the necessary prerequisites		
I understand the case study description		
I understand what I must do to properly accomplish the task		
I know what I need to perform the task (tools/resources)		
I understand the deadline for delivery of the case study		
I have estimated the deadline for delivery of the case study		
I understand how to deliver the project		
I understand the assessment criteria		
I am aware of the ECVET points I can achieve		

If you have marked some of the above “no”, read the guidelines again, or feel free to contact the trainer.

Submit the assignment

Assemble and upload a portfolio containing text and code

Portfolio Upload

This assignment has several steps. In the first step, you'll provide a response to the prompt. The other steps appear below the Your Response field.

Enter your response to the prompt. You can save your progress and return to complete your response at any time before the due date (Monday, Jan 1, 2029 01:00 CET). After you submit your response, you cannot edit it.

When ready, upload your files

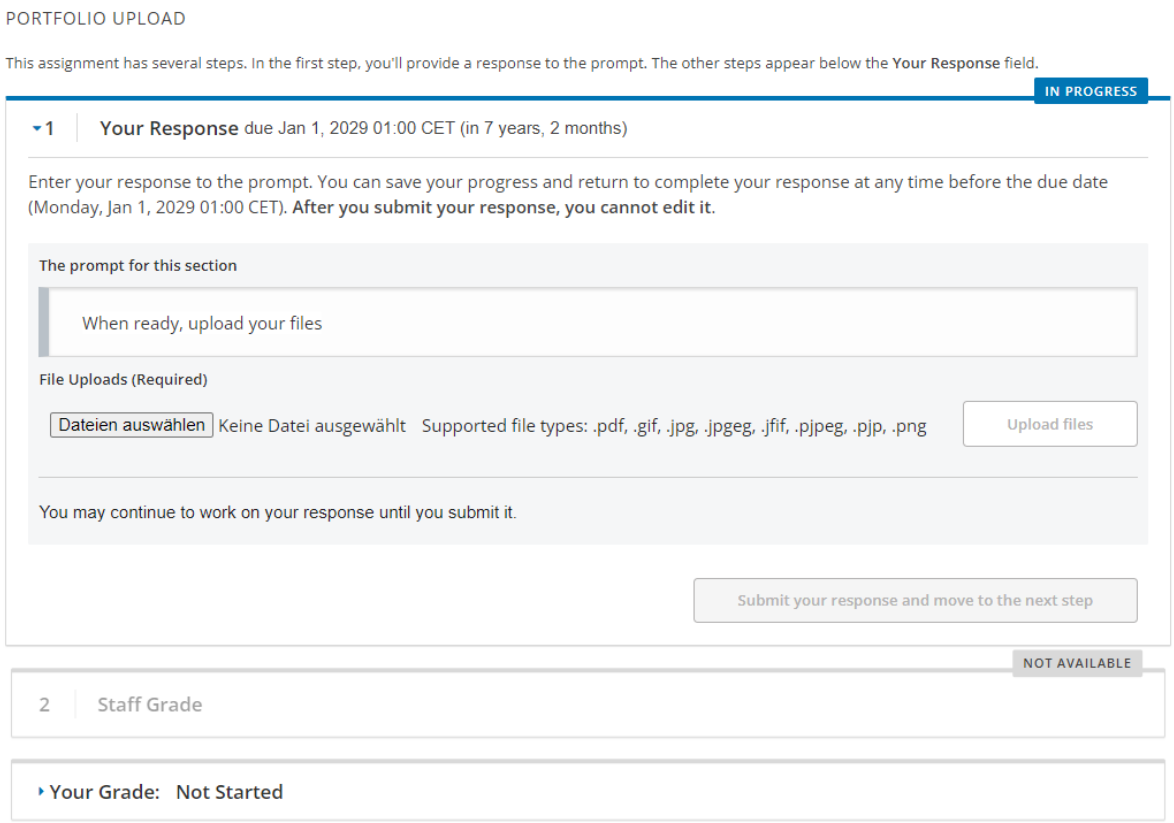

12. AM and Sensors and Automation: Automatic window closing mechanism actuated by a sensor

INDUSTRIAL EXPERT INDEX

Prerequisites

Have successfully passed the following courses:

- INDEX Basic course
- INDEX Intermediate level courses:
    - Additive Manufacturing
    - Sensors and Automation

Case Study Description

The following figure shows the prototype of a window closing mechanism. The aim of this project is to make it possible to open a window manually and then close it automatically when the temperature in the room rises in summer or falls in winter. In this case, the temperature should not be outside the range of 19 °C to 23 °C. At the same time, the humidity should not rise above 60%. Therefore, a system must be developed that checks the room conditions at regular intervals and, in case of undesired changes, triggers an electric linear actuator, which then closes the window using a cable. In addition, the system must be mounted on the window. This requires a housing, created by using additive manufacturing, into which the selected components fit.

Figure 1. 3D model of the window closing mechanism. Source: S. Markus/Hochschule Düsseldorf.

What the student should do

Develop a system that automatically closes a window depending on the rising/falling temperature and humidity detected by a sensor (see description). Use a microcontroller in combination with a temperature and humidity sensor. This controls a linear motor that pulls on a cable that is guided over a pulley.

1. Search for a cost-effective sensor to determine the room conditions like temperature and humidity. To identify a suitable sensor, you must set the requirements in terms of sensitivity and dynamic range. Explain why you chose the sensor(s).
2. List the hardware components that are needed for the connection to the linear actuator, paying special attention to the implementation of the power supply.

3. Open the provided CAD model with Fusion 360 and export the Case, the cover and the one clip as STL-files and make a reasoned choice for the export settings. Furthermore, explain why FDM is a suitable process for this project.
4. Import the STL-files in Cura and do the preprocessing settings. All parts should be printed at the same time. Export the file to 3mf-format. Explain which settings you made and what is generally important while preprocessing the model.

Case study features

A text from 10k to 20k characters, a STL-file with export settings and a Cura-file with all preprocessing settings.

Time required for the realization: 20 hours.

Presentation requirements

Free format: the student can choose the format that best describes the type of case study he/she is developing as long as he/she respects the above-mentioned features.

Tools & resources

To complete the case study the student will need to:

- Download and process the enclosed example of a box, by using Fusion 360 and Cura (Choose "Ultimaker 2 Extended +" as a printer);
- Watch the introduction video to Fusion 360;
- Do a web search.

Assessment criteria

	very uninnovative			very innovative
1. Innovativeness of the proposed solution	0	1	2	3
	less than 1 content			a various mixture of content
2. Ability to use the content from the courses involved	0	1	2	3
	less than 1 technology			a various mixture of technologies
3. Ability to apply the technologies presented in the courses involved	0	1	2	3
	very unclear			very clear
4. Clarity of the content	0	1	2	3
	very superficial			very deep

5. Quality of the content	0	1	2	3
	very poor			very precise
6. Use of appropriate technical language	0	1	2	3
	very unorganis ed and not structured			very organised and well structured
7. General organis ation/structure	0	1	2	3

Learning outcome & ECVET points

Knowledge	Skills	Competence

He/she has knowledge of ...	He/she is able to ...	he/she has developed ...
• Managing CAD models • All relevant AM processes • Preprocessing settings for AM • Various sensor principles for measuring temperature and humidity	• Prepare CAD models with Fusion 360 for printing • Choose a suitable AM process for a specific project • Do pre processing settings with a slicer • Choose suitable temperature and humidity sensors	• The competence to evaluate if AM is suitable for a certain project • The competence to assess if it is useful to implement AM in a particular process of product development • The ability to identify suitable sensors for this particular application

ECVET points: 2

Checklist for students

BEFORE STARTING THE CASE STUDY	YES	NO
I read the case study instructions carefully		
I know which INDEX courses/modules are involved in the case study		

I have the necessary prerequisites		
I understand the case study description		
I understand what I must do to properly accomplish the task		
I know what I need to perform the task (tools/resources)		
I understand the deadline for delivery of the case study		
I have estimated the deadline for delivery of the case study		
I understand how to deliver the project		
I understand the assessment criteria		
I am aware of the ECVET points I can achieve		

If you have marked some of the above “no”, read the guidelines again, or feel free to contact the trainer.

Submit the assignment

Assemble and upload a portfolio containing text and code

Portfolio Upload

This assignment has several steps. In the first step, you'll provide a response to the prompt. The other steps appear below the Your Response field.

Enter your response to the prompt. You can save your progress and return to complete your response at any time before the due date (Monday, Jan 1, 2029 01:00 CET). After you submit your response, you cannot edit it.

When ready, upload your files

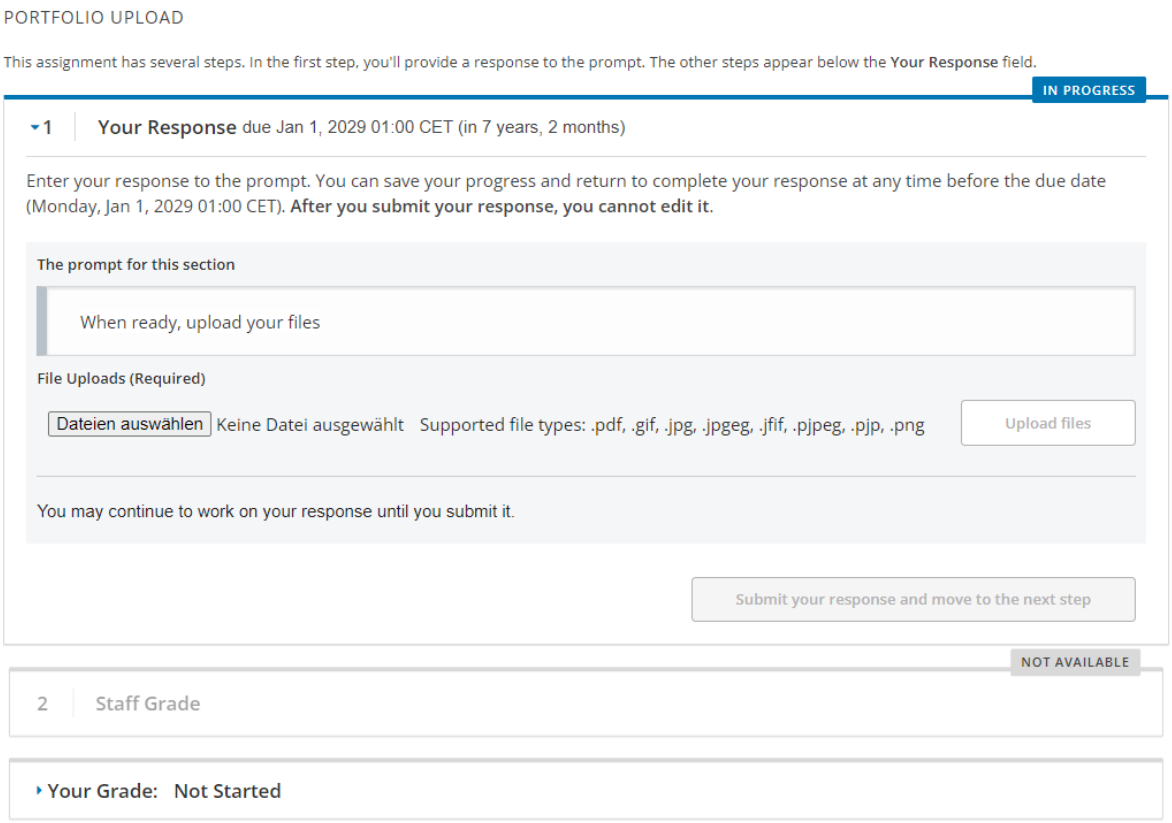

13. AR and IoT for safe maintenance of an industrial plant

Prerequisites

Have successfully passed the following courses:

- INDEX Basic course
- INDEX Intermediate level courses:

- Augmented Reality
- IoT
- Additive Manufacturing

Case Study Description

Please consider the following scenario:

a) A maintenance worker needs to replace a valve on a hot steam pipes system; in order to perform the task, the worker should make sure that the task ahead is safe (i.e. make sure that the temperature of pipes and valves is below 40 degrees Celsius)

Figure 1. AR Safety application example design for hot steam pipes system

INDUSTRIAL EXPERT INDEX

What the student should do

Please write a technical report (5000 words) that covers the following:

Design an Augmented Reality (AR) system that can indicate to a worker in an industrial environment whether a component is safe to be touched or manipulated; one can choose from a marker-based AR system or a marker-less AR system; please describe the components required to implement the AR app and a possible implementation platform together with all that is needed (for example one can use https://developer.vuforia.com/)

1. Please consider the fact that the AR App above needs to read sensor data via the Internet and indicate to the worker whether a component is cold enough for touching or manipulating. For instance, that component can be represented in green if safe or red if not (see above examples);
2. Now suppose that the industrial plant is covered with WiFi connectivity, and list the specs and provide practical examples of microcontrollers suitable to interface to a probe of temperature like the Melexis Contactless Infrared Sensor - MLX90614 3V (https://www.adafruit.com/product/1747), and to your existing network. Make a bill of materials needed to assemble a working prototype with an approximate budget of EUR 50;
3. Also suppose that the final application runs over MQTT, and motivates the choice of a relevant Quality of Service.

If you have chosen a marker-based AR experience, please design the markers required and describe the necessary steps required in order to 3D print them using Fused Deposition Modelling (FDM, also known as Fused Filament Deposition FFF, Material Extrusion 3D Printing ME3DP or MEX); if you chose a marker-less AR experience, please design a simple enclosure for probe temperature required and describe the necessary steps required in order to 3D print them using Fused Deposition Modelling (FDM, also known as Fused Filament Deposition FFF, Material Extrusion 3D Printing ME3DP or MEX); please choose an appropriate hardware and software requirement for the 3D printing process and provide the STL file and the corresponding gcode file

Case study features

A text from 10k to 20k characters + file.

Time required for the realization: 20 hours.

Presentation requirements

Free format

The student can choose the format that best describes the type of case study he/she is developing as long as he/she respects the above-mentioned features.

Tools & resources

To complete the case study the student will need:

- access to various electronic resources related to AR, IoT and AM technologies (mostly via Internet access)
- access to a 3D printer (including low-cost Material Extrusion printer)
- do a desk research

Assessment criteria

	very uninnovative			very innovative
1. Innovativeness of the proposed solution	0	1	2	3
	less than 1 content			a various mixture of content

2. Ability to use the content from the courses involved	0	1	2	3
	less than 1 technology			a various mixture of technologies
3. Ability to apply the technologies presented in the courses involved	0	1	2	3
	very unclear			very clear
4. Clarity of the content	0	1	2	3
	very superficial			very deep
5. Quality of the content	0	1	2	3
	very poor			very precise
6. Use of appropriate technical language	0	1	2	3

	very unorganised and not structured			very organised and well structured
7. General organisation/structure	0	1	2	3

Learning outcome & ECVET points

Objectives/ expected outcomes. By the end of this course, the trainee will:		
Knowledge	Skills	Competence
- he/she has knowledge of augmented technologies that can be applied within industrial context - he/she has knowledge of Internet of Things concept, theory and practices - he/she has knowledge related to additive manufacturing technologies for 3D printing small parts	- he/she is able to use augmented reality technologies to solve an industrial problem or to create an applied application scenario for such technology in an industrial context - he/she is able to use IoT concepts to solve a particular industrial problem/task - he/she is able to use additive manufacturing technologies to 3D print small parts	- he/she has developed an ability for using established software AR applications, can make decisions about adopting suitable technical solutions, and is responsible for creating an optimum AR user experience in accordance with the required functional role of the industrial application.

2 ECVET points

Co-funded by the
Erasmus+ Programme
of the European Union

INDUSTRIAL EXPERT INDEX

Checklist for students

BEFORE STARTING THE CASE STUDY	YES	NO
I read the case study instructions carefully		
I know which INDEX courses/modules are involved in the case study		
I have the necessary prerequisites		
I understand the case study description		
I understand what I must do to properly accomplish the task		
I know what I need to perform the task (tools/resources)		
I understand the deadline for delivery of the case study		
I have estimated the deadline for delivery of the case study		
I understand how to deliver the project		
I understand the assessment criteria		

INDUSTRIAL EXPERT INDEX

I am aware of the ECVET points I can achieve		

If you have marked some of the above “no”, read the guidelines again, or feel free to contact the trainer.

Submit the assignment (missing)

Assemble and upload a portfolio containing text and code

Portfolio Upload

This assignment has several steps. In the first step, you'll provide a response to the prompt. The other steps appear below the Your Response field.

5rf

Enter your response to the prompt. You can save your progress and return to complete your response at any time before the due date (Monday, Jan 1, 2029 01:00 CET). After you submit your response, you cannot edit it.

When ready, upload your files

INDUSTRIAL EXPERT INDEX

PORTFOLIO UPLOAD

This assignment has several steps. In the first step, you'll provide a response to the prompt. The other steps appear below the **Your Response** field.

IN PROGRESS

1 **Your Response** due Jan 1, 2029 01:00 CET (in 7 years, 2 months)

Enter your response to the prompt. You can save your progress and return to complete your response at any time before the due date (Monday, Jan 1, 2029 01:00 CET). **After you submit your response, you cannot edit it.**

The prompt for this section

When ready, upload your files

File Uploads (Required)

Dateien auswählen Keine Datei ausgewählt Supported file types: .pdf, .gif, .jpg, .jpgeg, .jfif, .pjpeg, .pjp, .png Upload files

You may continue to work on your response until you submit it.

Submit your response and move to the next step

NOT AVAILABLE

2 Staff Grade

Your Grade: Not Started

14. AR application for safety manipulation of welded parts

Prerequisites

Have successfully passed the following courses:

- INDEX Basic course
- INDEX Intermediate level courses:
- Augmented Reality
- IoT
- Additive Manufacturing

Case Study Description

Please consider the following scenario: a factory worker needs to move a part from a welding stand to a testing stand; in order to manipulate the part, the worker should make sure that it is cold enough (i.e. make sure that the temperature of the part is below 40 degrees Celsius)

Figure 1. AR Safety application example design for welded parts

What the student should do

Please write a technical report (5000 words) that covers the following:

- Design an Augmented Reality (AR) system that can indicate to a worker in an industrial environment whether a component is safe to be touched or manipulated; one can choose from a marker-based AR system or a marker-less AR system; please describe the components

required to implement the AR app and a possible implementation platform together with all that is needed (for example one can use https://developer.vuforia.com/)

- Please consider the fact that the AR App above needs to read sensor data via the Internet and indicate to the worker whether a component is cold enough for touching or manipulating. For instance, that component can be represented in green if safe or red if not (see above examples);
- Now suppose that the industrial plant is covered with WiFi connectivity, and list the specs and provide practical examples of microcontrollers suitable to interface to a probe of temperature like the Melexis Contactless Infrared Sensor - MLX90614 3V (https://www.adafruit.com/product/1747), and to your existing network. Make a bill of materials needed to assemble a working prototype with an approximate budget of EUR 50;
- Also suppose that the final application runs over MQTT, and motivates the choice of a relevant Quality of Service.

If you have chosen an marker-based AR experience, please design the markers required and describe the necessary steps required in order to 3D print them using Fused Deposition Modelling (FDM, also known as Fused Filament Deposition FFF, Material Extrusion 3D Printing ME3DP or MEX); if you chose a marker-less AR experience, please design a simple enclosure for probe temperature required and describe the necessary steps required in order to 3D print them using Fused Deposition Modelling (FDM, also known as Fused Filament Deposition FFF, Material Extrusion 3D Printing ME3DP or MEX); please choose an appropriate hardware and software requirement for the 3D printing process and provide the STL file and the corresponding gcode file

Case study features

An essay from 20k to 40k characters + file.

Time required for the realization: 20 hours.

Presentation requirements

Free format

The student can choose the format that best describes the type of case study he/she is developing as long as he/she respects the above-mentioned features.

Tools & resources

To complete the case study the student will need:

- access to various electronic resources related to AR, IoT and AM technologies (mostly via Internet access)
- access to a 3D printer (including low-cost Material Extrusion printer)
- do a desk research

Assessment criteria

	very uninnovative			very innovative
1. Innovativeness of the proposed solution	0	1	2	3
	less than 1 content			a various mixture of content
2. Ability to use the content from the courses involved	0	1	2	3
	less than 1 technology			a various mixture of technologies

3. Ability to apply the technologies presented in the courses involved	0	1	2	3
	very unclear			very clear
4. Clarity of the content	0	1	2	3
	very superficial			very deep
5. Quality of the content	0	1	2	3
	very poor			very precise
6. Use of appropriate technical language	0	1	2	3
	very unorganis ed and not structured			very organis ed and well structured
7. General organis ation/structure	0	1	2	3

Learning outcome & ECVET points

Objectives/ expected outcomes. By the end of this course, the trainee will:		
Knowledge	Skills	Competence
- he/she has knowledge of augmented technologies that can be applied within industrial context - he/she has knowledge of Internet of Things concept, theory and practices - he/she has knowledge related to additive manufacturing technologies for 3D printing small parts	- he/she is able to use augmented reality technologies to solve an industrial problem or to create an applied application scenario for such technology in an industrial context - he/she is able to use IoT concepts to solve a particular industrial problem/task - he/she is able to use additive manufacturing technologies to 3D print small parts	- he/she has developed an ability for using established software AR applications, can make decisions about adopting suitable technical solutions, and is responsible for creating an optimum AR user experience in accordance with the required functional role of the industrial application.

Checklist for students

BEFORE STARTING THE CASE STUDY	YES	NO
I read the case study instructions carefully		

I know which INDEX courses/modules are involved in the case study		
I have the necessary prerequisites		
I understand the case study description		
I understand what I must do to properly accomplish the task		
I know what I need to perform the task (tools/resources)		
I understand the deadline for delivery of the case study		
I have estimated the deadline for delivery of the case study		
I understand how to deliver the project		
I understand the assessment criteria		
I am aware of the ECVET points I can achieve		

If you have marked some of the above “no”, read the guidelines again, or feel free to contact the trainer.

Submit the assignment (missing)

INDUSTRIAL EXPERT INDEX

Assemble and upload a portfolio containing text and code

Portfolio Upload

This assignment has several steps. In the first step, you'll provide a response to the prompt. The other steps appear below the Your Response field.

Enter your response to the prompt. You can save your progress and return to complete your response at any time before the due date (Monday, Jan 1, 2029 01:00 CET). After you submit your response, you cannot edit it.

When ready, upload your files

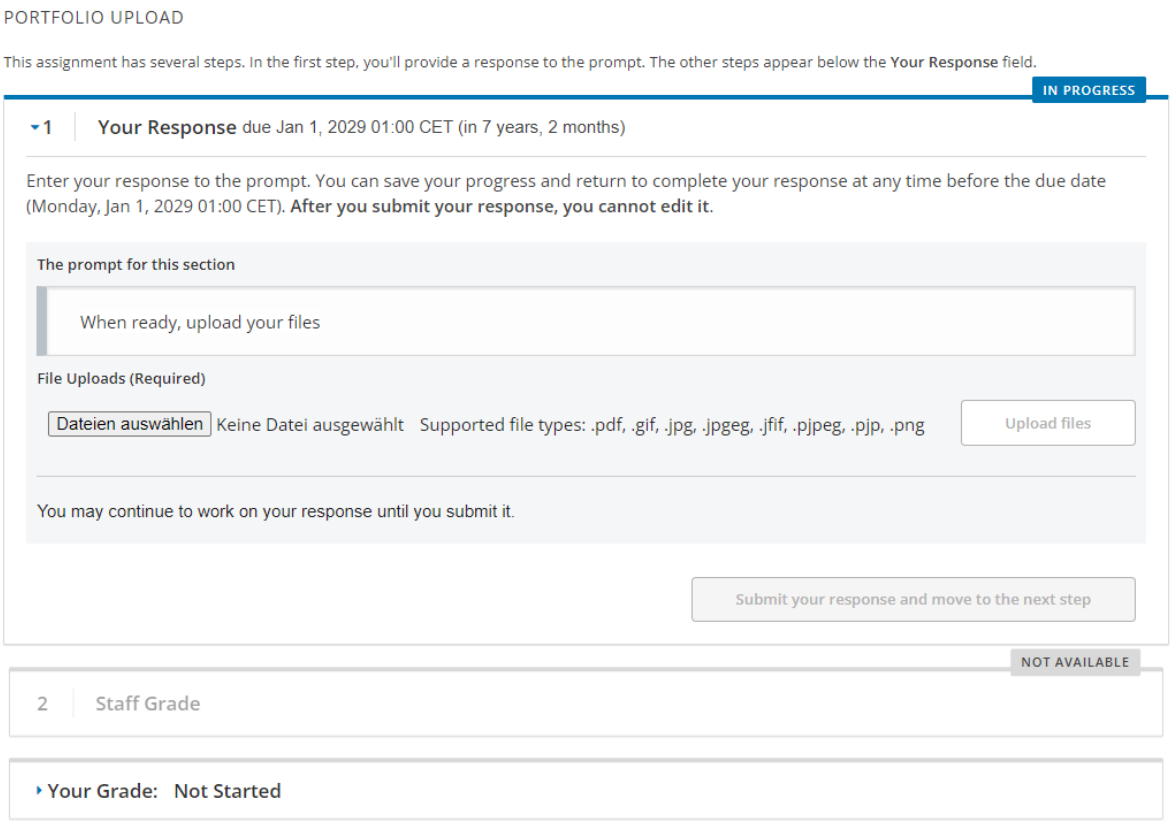

15. AR application for industrial training of workers

Prerequisites

Have successfully passed the following courses:

INDUSTRIAL EXPERT INDEX

- INDEX Basic course
- INDEX Intermediate level courses:

- Augmented Reality
- Additive Manufacturing

Case Study Description

Using an Augmented Reality application, a worker can be shown step by step procedures to perform assembly tasks more easily than in a traditional way. In this respect, the digital information can be given to the worker either via an HMD (Head Mounted Display) or via a table or other assistive technology. More information can be found by visiting the following links:

- https://www.yeppar.com/blog/ar-industrial-training-solution-major-manufacturing-challenges/
- https://www.youtube.com/watch?v=ZMh1kPTikOA
- https://roundtablelearning.com/artrainingformanufacturing/
- https://www.researchgate.net/publication/337790728_Integrating_Augmented_Reality_in_Training_and_Industrial_Applications

What the student should do

Please write a technical report (5000 words) that covers the following:

- Design an Augmented Reality (AR) system that can indicate to a worker in an industrial environment a step by step procedure to perform assembly tasks; please describe the proposed system in detail (i.e. using a specific HMD or other assistive technology, remote assistance, etc.); please describe the components required to implement the AR app and a possible implementation platform together with all that is needed;
- Identify the suitable software and hardware requirements (including any assistive technology such as Head Mounted Displays – HMD that are required)
- If you have chosen a marker-based AR experience, please design the markers required and describe the necessary steps required in order to 3D print them using Fused Deposition Modelling (FDM, also known as Fused Filament Deposition FFF, Material Extrusion 3D Printing ME3DP or MEX); if you chose a marker-less AR experience, please design a simple

enclosure for the AR device in order to be safely used in an industrial environment and describe the necessary steps required in order to 3D print it using Fused Deposition Modelling (FDM, also known as Fused Filament Deposition FFF, Material Extrusion 3D Printing ME3DP or MEX); please choose an appropriate hardware and software requirement for the 3D printing process ; please submit the STL file and the corresponding gcode file for one of the designed markers.

Case study features

An essay from 20k to 40k characters
OR
A text from 10k to 20k characters + file.
Time required for the realization: 20 hours.

Presentation requirements

Free format
The student can choose the format that best describes the type of case study he/she is developing as long as he/she respects the above-mentioned features.

Tools & resources

To complete the case study the student will need:
- access to various electronic resources related to AR and AM technologies (mostly via Internet access)
- access to a 3D printer (including low-cost Material Extrusion printer)
- do a desk research related to industrial AR training applications

Assessment criteria

	very uninnovative			very innovative

1. Innovativeness of the proposed solution	0	1	2	3
	less than 1 content			a various mixture of content
2. Ability to use the content from the courses involved	0	1	2	3
	less than 1 technology			a various mixture of technologies
3. Ability to apply the technologies presented in the courses involved	0	1	2	3
	very unclear			very clear
4. Clarity of the content	0	1	2	3
	very superficial			very deep
5. Quality of the content	0	1	2	3

	very poor			very precise
6. Use of appropriate technical language	0	1	2	3
	very unorganis ed and not structured			very organis ed and well structured
7. General organis ation/structure	0	1	2	3

Learning outcome & ECVET points

Checklist for students

BEFORE STARTING THE CASE STUDY	YES	NO
I read the case study instructions carefully		
I know which INDEX courses/modules are involved in the case study		
I have the necessary prerequisites		
I understand the case study description		

I understand what I must do to properly accomplish the task		
I know what I need to perform the task (tools/resources)		
I understand the deadline for delivery of the case study		
I have estimated the deadline for delivery of the case study		
I understand how to deliver the project		
I understand the assessment criteria		
I am aware of the ECVET points I can achieve		

If you have marked some of the above “no”, read the guidelines again, or feel free to contact the trainer.

Submit the assignment (missing)

Assemble and upload a portfolio containing text and code

Portfolio Upload

This assignment has several steps. In the first step, you'll provide a response to the prompt. The other steps appear below the Your Response field.

Enter your response to the prompt. You can save your progress and return to complete your response at any time before the due date (Monday, Jan 1, 2029 01:00 CET). After you submit your response, you cannot edit it.

INDUSTRIAL EXPERT INDEX

When ready, upload your files

15. AR application for production line planning

Prerequisites

Have successfully passed the following courses:

- INDEX Basic course
- INDEX Intermediate level courses:
- Augmented Reality
- Additive Manufacturing

Case Study Description

Nowadays, in the context of Industry 4.0 concepts and technologies, the manufacturing field has to become more dynamic. Hence, the need to adjust the factory layout fast in order to support flexible manufacturing on the shop floor when a new production batch is set up. This is done by considering the process flow requirements and the spatial constraints by other production lines that take place simultaneously on the same factory floor. An operator can use an AR device to change the layout on site that is directly linked to a simulation application that simulates and visualis es the changes to the production flow.
More information and examples can be found by visiting the following links:

- https://holo-light.com/factory-planning-with-augmented-reality/
- https://www.google.ro/url?sa=t&rct=j&q=&esrc=s&source=web&cd=&ved=2ahUKEwjFttLx9v_xAhXWgf0HHQqJDUwQFjAAegQIAxAD&url=https%3A%2F%2Fmediatum.ub.tum.de%2Fdoc%2F652443%2F652443.pdf&usg=AOvVaw00hn9XDJnpJg2iZ3T8hJm3
- https://artwin-project.eu/index.php/ar-based-factory-planning-2/
- https://link.springer.com/article/10.1007/s00170-014-5653-6
- https://www.researchgate.net/publication/231514060_Augmented_Reality_for_manufacturing_planning

INDUSTRIAL EXPERT INDEX

What the student should do

Please write a technical report (5000 words) that covers the following:

1. Design an Augmented Reality (AR) system that can allow and operator to manipulate manufacturing equipment /machines on a shop floor in order to accommodate a new production process (i.e. rearrange the machines in order to accommodate the correct order of operation for the new product that needs to be manufactured); the operator should use markers in order to rearrange the machines on the factory floor; the new layout needs then to be validated via a simulation software
2. Identify the suitable software and hardware requirements (including any assistive technology such as Head Mounted Displays – HMD that are required)
3. Please design markers required for the AR experience and describe the necessary steps required in order to 3D print them using Fused Deposition Modelling (FDM, also known as Fused Filament Deposition FFF, Material Extrusion 3D Printing ME3DP or MEX); please choose an appropriate hardware and software requirement for the 3D printing process and provide an STL file and a gcode file or for one of the markers.

Case study features

■ A text from 10k to 20k characters + file
Time required for the realization: 20 hours.

Presentation requirements

Free format
The student can choose the format that best describes the type of case study he/she is developing as long as he/she respects the above-mentioned features.

Tools & resources

To complete the case study the student will need:

- access to various electronic resources related to AR and AM technologies (mostly via Internet access)
- access to a 3D printer (including low-cost Material Extrusion printer)

- do a desk research related to industrial AR applications

Assessment criteria

	very uninnovative			very innovative
1. Innovativeness of the proposed solution	0	1	2	3
	less than 1 content			a various mixture of content
2. Ability to use the content from the courses involved	0	1	2	3
	less than 1 technology			a various mixture of technologies
3. Ability to apply the technologies presented in the courses involved	0	1	2	3
	very unclear			very clear
4. Clarity of the content	0	1	2	3

	very superficial			very deep
5. Quality of the content	0	1	2	3
	very poor			very precise
6. Use of appropriate technical language	0	1	2	3
	very unorganis ed and not structured			very organis ed and well structured
7. General organis ation/structure	0	1	2	3

Learning outcome & ECVET points

- he/she has knowledge of augmented technologies that can be applied within industrial context - he/she has knowledge of Internet of Things concept, theory and practices - he/she has knowledge related to additive manufacturing technologies for 3D printing small parts	- he/she is able to use augmented reality technologies to solve an industrial problem or to create an applied application scenario for such technology in an industrial context - he/she is able to use IoT concepts to solve a particular industrial problem/task - he/she is able to use additive manufacturing technologies to 3D print small parts	- he/she has developed an ability for using established software AR applications, can make decisions about adopting suitable technical solutions, and is responsible for creating an optimum AR user experience in accordance with the required functional role of the industrial application.

Checklist for students

BEFORE STARTING THE CASE STUDY	YES	NO
I read the case study instructions carefully		
I know which INDEX courses/modules are involved in the case study		
I have the necessary prerequisites		

I understand the case study description		
I understand what I must do to properly accomplish the task		
I know what I need to perform the task (tools/resources)		
I understand the deadline for delivery of the case study		
I have estimated the deadline for delivery of the case study		
I understand how to deliver the project		
I understand the assessment criteria		
I am aware of the ECVET points I can achieve		

If you have marked some of the above “no”, read the guidelines again, or feel free to contact the trainer.

Submit the assignment

Assemble and upload a portfolio containing text and code

Portfolio Upload

This assignment has several steps. In the first step, you'll provide a response to the prompt. The other steps appear below the Your Response field.

Co-funded by the
Erasmus+ Programme
of the European Union

INDUSTRIAL EXPERT INDEX

Enter your response to the prompt. You can save your progress and return to complete your response at any time before the due date (Monday, Jan 1, 2029 01:00 CET). After you submit your response, you cannot edit it.

When ready, upload your files.

CASE 1: Continuous groundwater monitoring

Background

Increasing periods of drought as a result of climate change can cause severe problems in a number of European countries, leading to enormous amounts of damage. Most of the damage is in urban areas involving infrastructural works and buildings, mainly affecting the underground foundations. But also the rural areas of countries are severely affected as crops deteriorate and the soil quality is lowering.

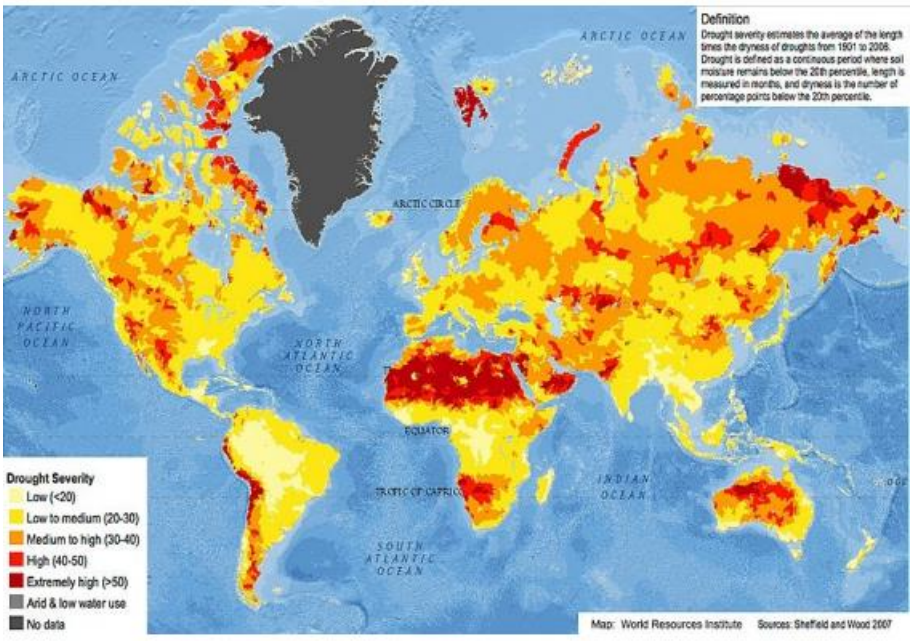

Map indicating the drought severity in different parts of the world.

Main problem is that owners of property do not know about the groundwater levels on their property, and have little means to influence this, as the groundwater level is influenced by many external factors, such as buildings, constructions, amounts of rain and drought, etc.

Measuring groundwater levels is now typically done before infrastructural works are constructed. This is

done by putting a hollow pipe into the ground and using a ruler (mostly a metal strip) to detect the water level within the pipe. This must be done by a person, and is a one-time measurement, making it costly and far from continuous.

Just to give you an impression:

https://www.youtube.com/watch?v=imUYBPug8gY

Description of the case

Can we find a cost-effective sensor that can be installed on top of the hollow pipes that are currently used, in order to continuously or semi-continuously (once a day) measure the level of the groundwater? This value needs to be transmitted automatically to a central data center where data from many sensors are brought together in order to create a map of the ground water level at any time, and provide insights in how these levels change.

Points to consider:

- What sensor principle is most suited for this application?

- How is the data transmitted to a central computer, that collects all the data? (what protocol, or data connection)

- How is power management arranged?

- Is this data public?

- How can this data be used by individual property owners?

COVISENS: RAPID COVID-19 DETECTION WITH PHOTONIC BIOSENSORS

Background

In recent years, there have been several examples of serious virus outbreaks such as severe acute respiratory syndrome (SARS) and most recently coronavirus disease 2019 (COVID-19). These virus outbreaks can rapidly spread worldwide to become pandemics with devastating effects on populations and their social and economic development. Therefore fast, on-site and sensitive detection of viruses is essential in detecting the onset of viral epidemics and preventing their spread. Current virus detection methods, mainly based on polymerase chain reaction (PCR), are not compatible with point-of-care (POC) settings as they are time-consuming, expensive and require labor-intensive sample preparation and trained personnel for their operation.

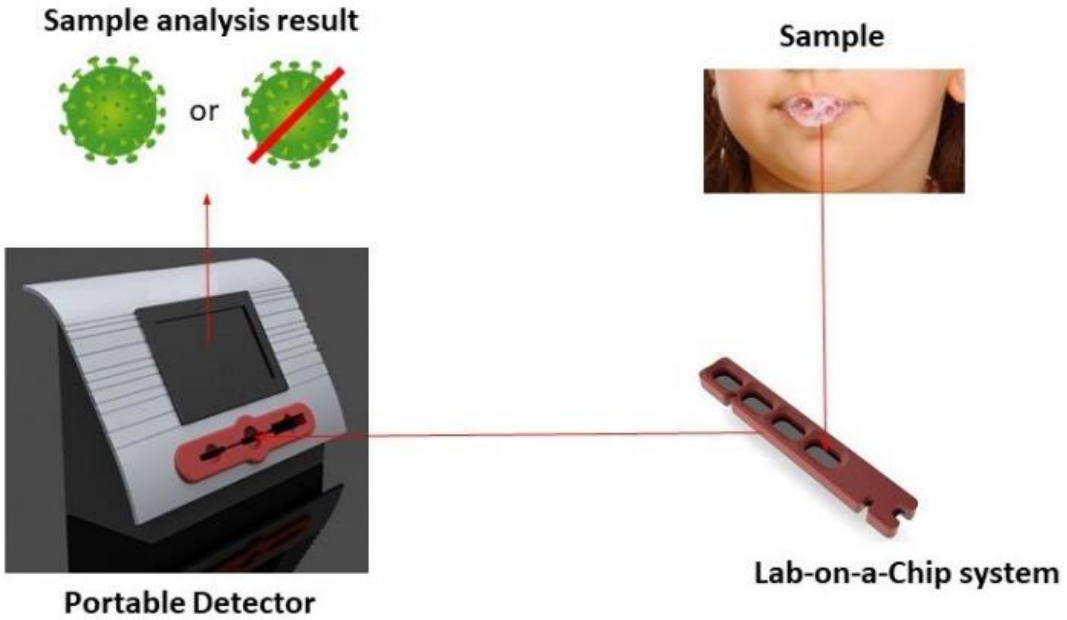

Schematic representation of the analysis of sputum samples using a portable demonstrator (consisting of a Lab-on-a-Chip system and a portable detector) based on a photonic biosensor prototype. Lab-on-a-Chip (LOC) photonic biosensors are a good candidate for sensitive, rapid and multiplex detection of various analytes such as micro-organisms (viruses and bacteria) and biomarkers (proteins and DNA/RNA molecules). The high sensitivity that photonic biosensors can achieve could result to less sample pre-concentration handling, which contributes to faster analysis and savings on operational costs.

Moreover, these biosensors are easy-to-use and compact, offering the possibility for development of portable/handheld devices.

Description of the case

In this project, NanoBio Research Group (Saxion) is working in collaboration with several high-tech SME companies and other relevant partners for realization of a portable demonstrator for rapid and accurate detection of the SARS-CoV-2 coronavirus, based on a multichannel photonic biosensor prototype. This will be achieved by integrating (existing) innovative technologies such as lab-on-a-chip, microfluidics, inkjet printing and integrated photonic sensors. This portable demonstrator with be a first step towards development of a handheld device to rapidly detect coronavirus at POC settings, such as test “streets” and airports.

Implementation in practice:

- Can we detect COVID-19 virus in clinically relevant samples such as sputum and/or nose-swabs?

- Can the test be fast and reliable, and yet affordable?

- If the test results to be positive → what are the follow-up measures?

- How is the data transmitted to a central computer/datacenter, that collects all the data (what protocol or data connection is needed)?

- Can we link the test results to the person being tested (to build up a disease history) → dealing with ethical and privacy aspects?

- Where can we deploy this demonstrator effectively?

- How exactly does the practical cases look like?

- Which stakeholders must be involved for this development?

How can the collected data be used e.g. by health organizations, employers, event organizers, etc?

PHOBIOSENS: RAPID DETECTION OF ANTIBIOTICS IN MILK WITH PHOTONIC SENSORS

Background

Accurate and rapid detection of contaminants in food products is necessary, but often cumbersome and a technically complex process. Current gold standard methods are typically based on highly specific, but expensive lab techniques, which are able to detect contaminants in different complex samples. Rapid and affordable alternative methods, mostly based on dipstick tests, are not accurate enough and can detect only one parameter/analyte. The recent fibronil affair illustrates that, despite the technological advances in detection technology, there is still a need for low-cost, fast and reliable tests for routine screening of food products.

The dairy industry is very interested in a rapid, easy-to-use and affordable method for detection of contaminants such as antibiotics and bacteria in milk, whey and baby fooding since currently available detection methods are expensive and very time- and labor-intensive. It typically takes several hours to a number of days before reliable results can be obtained. A faster analysis of the milk can contribute to savings of costs that are currently being made by destroying large quantities of contaminated milk due to delaying of test results. Obtaining results in a shorter time allows also a faster release for distribution of dairy products and this contributes directly to savings on operational costs.

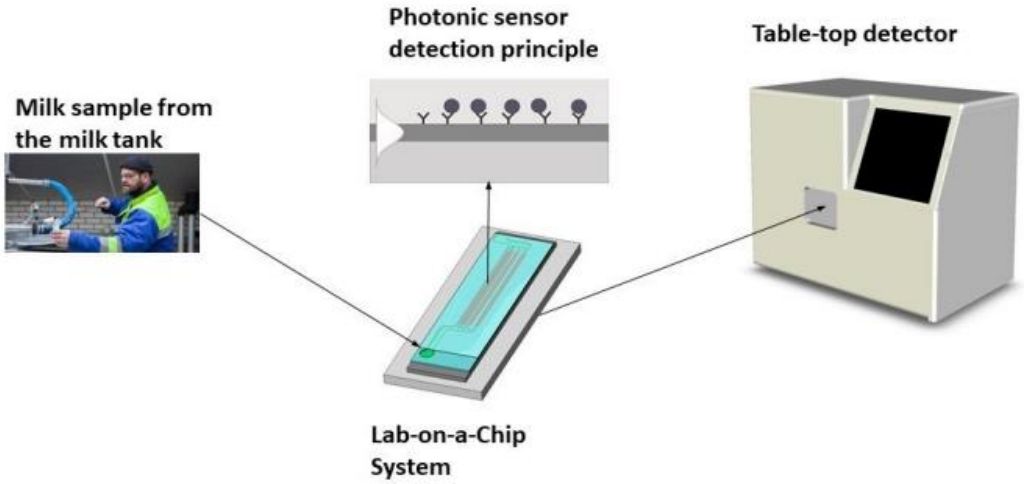

Schematic representation of a milk sample analysis using a portable demonstrator (consisting of a Lab-on a-Chip system and a portable detector) based on a photonic sensor prototype.

Description of the case

NanoBio Research Group (Saxion) is working in this project with several SME's and other relevant partners for the realization of a table-top/portable demonstrator for rapid and accurate detection of antibiotics such as tetracyclines in milk, based on a multichannel photonic sensor prototype. Various innovative technologies, including lab-on-a-chip, microfluidics, inkjet-printing and integrated photonic sensors will be integrated into this demonstrator to achieve the set goal.

The portable detector will be a first step towards the realization of a handheld device, which will enable rapid and reliable detection of antibiotics in milk at the point-of-need settings such as dairy farms and factories.

Implementation in practice:

- Are the photonic sensors sensitive enough to detect e.g. tetracycline concentrations < Maximum Residue Limit (MRL) of 100 ng/mL (according to EU regulation)?

- Can we detect antibiotics such as tetracycline and penicillin in relevant samples such as milk at the point-of-need, e.g. dairy farms?

- Can the demonstrator be fast and reliable, and yet affordable?

- How can the generated data be transmitted to a central lab/datacenter (what protocol and/or data connection is needed)?

- Where can we implement this demonstrator effectively?

- How exactly does the practical cases look like?

- Which stakeholders can be involved in this development

Co-funded by the
Erasmus+ Programme
of the European Union

INDUSTRIAL EXPERT INDEX

INDEX: Industrial Expert

Virtual Reality - Advanced Module

eduVR
BUSINESS PLAN

- **No additional restrictions** — You may not apply legal terms or technological measures that legally restrict others from doing anything the license permits.

Virtual Reality – Advanced Module

Executive summary

Author: Bartek KALINOWSKI

The company's aim is to introduce a revolutionary concept in educational technology and services.

eduVR[1] offers a VR headset combined with a unique student-friendly interface, gesture controls, embedded educational resources and simple-to-use teacher controls. The content can be further developed both by the company and final users, thanks to easy management. Apart from the hardware, eduVR offers, technology support, maintenance.

The offer of eduVR is a groundbreaking new technology designed to help raise engagement and increase knowledge retention for students of all ages. And it's affordable and does not need any additional technologies so it can be easily introduced to the classroom,

The product is suitable for use at all educational level to enhance teaching results and students' engagement.

The company has already established the contact with a Chinese manufacturer and signed all necessary IP agreements.

The firm is at the start-up stage, which includes the funding of activities linked to the company's market presence. The company's operational activity has begun, it has been legalised, and a limited number of items are scheduled to be released to the market. The offer will be compared to the needs of the clients.

eduVR must finance the following: the initial product production process, its organisational structure (including personnel recruiting), and the initial marketing efforts. The area of market acceptability of the given product or service is currently the major source of risk.

The company operates as private limited company (fin. osakeyhtiö, OY) and is registered in National Board of Patents and Registration. There is one partner in the company – the founder.

eduVR has obtained a place in one of Finnish business incubators: xEdu, which is a startup accelerator focused on education sector.

[1] The material uses descriptions of a product provided by ClassVr company, https://www.classvr.com

INDUSTRIAL EXPERT INDEX

Company description

Mission and vision

*Our **mission** is to deliver new experiences into the classroom enabling children and youth to enhance internal assets in learning process.*

*Our **vision** is to become highly competitive partner for educational institutions helping them build a responsible and sustainable education and training for a society.*

Customer value[2]

Staying ahead of school trends now seems almost impossible as consumer adaptation of technology causes prices to fall and the latest innovations commodity, making them easily accessible to home users. Most of the new technologies are rapidly being adapted to home users. In fact, it is rare to see technology in schools these days that students have not yet seen or possess. Not surprisingly, technology in the classroom often fails to meet students' expectations; they already "did it". So all that budget you've just spent on more tablets, laptops, or interactive whiteboard won't get the commitment or excitement we need to spark their imaginations and spark their creativity. Our students got used to this technology and neglected it a bit.
Virtual Reality, in its pure definition, can provide students with experiences and interactions that are not practical or impossible in the "real world", it provides an unparalleled way to immerse and engage students of all ages. Virtual Reality helps students feel immersed in the experience by capturing their imaginations and stimulating their thinking in a way that is not possible with traditional books, pictures or videos, and facilitated by a much higher level of knowledge retention. Strengthening and extending the learning experience is at the heart of what virtual reality can offer students and is arguably one of the most powerful technologies that can help change the way we learn forever. Virtual Reality enables students to visit places that are not practical or even possible in real life, all from a safe place in the classroom. Imagine being able to examine the inside of a blood vessel, the structure of an atom, the

[2] The material uses descriptions of a product and its characteristics provided by ClassVr company, (https://www.classvr.com) and FotonVR (https://fotonvr.com).

depths of the ocean, or the surface of the moon. With virtual reality, places can be explored as if you were actually there, and students can experience and interact with beings they will likely never see in their lives. Thanks to virtual reality, we can put students in simulated dangerous and compromising situations, in places they should never experience in the real world, and thus they can learn empathy, security and emotions, as well as gain understanding that is simply unattainable in traditional media. Imagine what immersion, understanding, and emotional experience a student could acquire while standing in trenches during World War I. Virtual Reality provides one of the most important aspects of learning that no other technology can match - experience. Edgar Dale, in his Cone of Experience, theorised that we keep about 10% of what we read, but 90% of what we experience ourselves. Virtual reality facilitates the acquisition of knowledge at the highest possible level through engaging and engaging personal experiences. Bringing personal experiences into the classroom and involving students in new activities that are not normally possible has the potential to really change the way they learn.
Implementing virtual reality in educational process makes the learning process:

- Entertaining.

Students may explore locations that are not feasible or even conceivable in real life thanks to virtual reality, all from the safety of the classroom. Consider being able to peer into a blood artery, the structure of an atom, the depths of the ocean, or the surface of the moon or ocean. Virtual Reality allows you to explore locations as if you were there in person and pupils may engage with beings they will most likely never see in their lifetimes. We may put children in simulated dangerous and compromising circumstances, in areas they should never visit in real life, using virtual reality, and they can learn empathy, security, and emotions, as well as acquire utmost safety.

- Efficient.

Virtual reality, unlike any other technology, delivers one of the most fundamental components of learning that no other technology can match: experience. Edgar Dale proposed in his Cone of Experience that we recall only around 10% of what we read but 90% of what we experience firsthand. Through immersive and engaging personal experiences, virtual reality promotes the best degree of information retention possible. Bringing personal experience into the classroom and engaging students in previously unimaginable activities has the potential to genuinely improve information retention.

- Easy.

A new class of upcoming equipment called as 'standalone' is currently accessible. These are a hybrid solution, with completely integrated electronics, CPUs, Wi-Fi display displays, and batteries, allowing the device to function as a standalone system. There is no necessity to include a mobile phone or a linked PC. Systems such as ClassVR offer a standalone headset at a cheap price, making them a perfect choice for classroom mobility and student use.
Therefore it:

- Increases students interest,
- Improves communication between students and teachers,
- Makes learning process more comfortable.

The final value for the school or university are better educational results and therefore the solution allows them to combat the competitors and increase market share.

Target market

The offer of eduVR is directed to secondary schools, including vocational and also to universities
The company intends to start operating in Finland and expand later in other European countries.

Product/service snapshot[3]

The headsets are stand-alone, classroom-ready devices that provide a completely immersive VR / AR experience guided by the teacher.

All that you need is included in eduVR kits, so there's no need to add a mobile device. Both sets include a 5.5-inch HD screen, a front-facing camera, and an integrated Wi-Fi module.

eduVR R is ready to use right away. When students put on the eduVR headset, they are transported to a future "holodeck", where they may navigate using novel head and hand motions.

There is a variety of learning exercises available to them, either modified and supplied to the headset by the teacher or from a predetermined collection of subjects and activities. The eduVR interface secures system settings, displays a personalised collection of learning resources, and guarantees students are completely focused on the work at hand with no distractions.

Keeping headsets safe, secure, and properly charged is essential to ensuring they are ready for class. The eduVR Storage and Charging Case provides maximum security and protection in the classroom while also allowing you to charge all 8 headsets safely and fast, even when the case is closed and secured. The portable case enables students to transport devices between classes conveniently and safely, allowing you to share exciting experiences with all learners.

The software for the headset contains educational content depending on the order.

EduX incubator and accelerator

EduVR has been accepted into the xEdu program.4 xEdu is Europe's premier business accelerator for educational technology businesses developing disruptive learning solutions with pedagogical effect. xEdu provides comprehensive help ranging from product creation through market launch and internationalisation, including coaching and mentoring as well as real-world testing settings for research and development. For startups, xEdu offers a worldwide partner network of acknowledged leaders in the education industry. eduVR will participate in the incubation activities co-organised with partners of xEdu (NewCo Helsinki, Helsinki Think Company, hackathons) and get prepared to apply for the acceleration period.

[3] The material uses descriptions of a product provided by ClassVr company, https://www.classvr.com
[4] https://www.xedu.co/#about

Every year, xEdu hosts two accelerator programs for edtech startups: Spring (March - June) and Fall (September - December) (September - December). The Spring program application season begins in December, and the selection process is completed by the end of January. The Fall program application season begins in May, and the finest teams are chosen by the end of June. After completing the intensive three-month program (which includes business modules, coaching tracks, events, mentorship, co-creation with schools, and other activities), the companies continue to benefit and get support by becoming members of the xEdu alumni network.

Participating in xEdu program is a great opportunity for eduVR. Being selected for the program is itself a proof of a promising commercial opportunity of eduVR offer. The program is a great opportunity to advance and even after the program, there are benefits:

- Access to GAN networks and all the perks coming with it.
- xEdu community support, trainings and events.
- Possibilities to go to international markets through our partnerships.
- Connections to investors.
- Mentoring.
- Marketing and visibility through the xEdu channels.

INDUSTRIAL EXPERT INDEX

Market analysis

In this chapter, the current VR/AR market situation in Finland is described as the company intends to enter Finnish market first.
The company's target clients are educational institutions. This is why, the educational market in Finland is analysed here as well.

Overview of the VR/AR global market

Market Snapshot

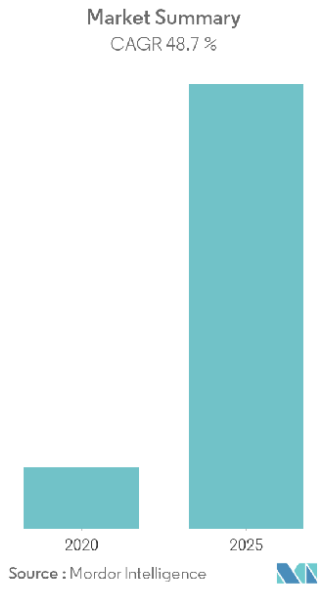

Study Period:	2019- 2026
Base Year:	2020
Fastest Growing Market:	Asia Pacific
Largest Market:	North America
CAGR:	48.7 %

Source: https://www.mordorintelligence.com/industry-reports/virtual-reality-market

Co-funded by the
Erasmus+ Programme
of the European Union

INDUSTRIAL EXPERT INDEX

Overview of the VR/AR market in Finland

Finland has been at the forefront of Virtual Reality (VR) development since the release of "The Second Wave of VR" by Oculus Rift and HTC Vive in early 2016. At the moment, there are over 100 firms that are solely focused on VR/AR technology (AR stands for "augmented reality," which allows sensory information to be embedded in a real-world environment). In addition, several "traditional" software firms began to establish their own VR divisions. Similarly, the Finnish industry has awoken to this technical advancement, envisioning a wide range of VR use cases, such as the "digital twin" of a machine or a structure. While technology is not yet ready to handle every circumstance imaginable, many businesses are already seeing the value that VR can bring to their everyday operations. The following are some market and industry sectors in the Finnish VR/AR-ecosystem:

• Adult entertainment	• Content management
• Aerospace	
• Architecture, engineering, construction (AEC) and real estate	• Design
• Automotive	• Developer tools
• Games	• Exercise
• Education	• Graphics
• Healthcare	• Hardware development
• Heavy industry	• Maintenance
• Maritime	• Marketing
• Travel	• Performance measurement (benchmarking)
• 360 photography and video	• Training
	• VR arcades

Source: https://fivr.fi/survey2017/

The Finnish VR sector has progressed to the point where there are sound business strategies and ecosystems for VR use, but it has not yet achieved its full potential. VR is still mostly focused on "seeing 3D objects in VR" (e.g., marketing, visualising), with just lately an attempt made to deploy more advanced VR solutions on a larger scale, with more complicated interactions or communication processes in virtual space. Various social VR apps (i.e. multi-user VR with avatar-based interactions) have lately begun to surface in the Finnish environment.

Despite all of this progress, many of the benefits of utilising VR are still being realised slowly, and – outside of its most obvious use cases (e.g., construction) – there are still some significant hurdles to adoption. Many of these impediments are related to human issues rather than technology capabilities.

Many organisations in the sector are fast experimenting various VR solutions, but adapting business and communication processes around VR still takes a significant amount of effort, particularly because there is a lack of knowledge of what VR can accomplish and where it is headed in the near future.
Fortunately, Finland has a vibrant community of technology enthusiasts to address this issue. Hackathons, game development/gaming businesses, visual computing skills, as well as high-quality education and academic research, offer a solid foundation for furthering VR technology.
Main universities already familiar with VR (http://www.digitalmedia.fi/wp-content/uploads/2018/02/DMF_VR_report_edit_180124.pdf):

- Aalto University

The Department of Signal Processing and Acoustics is developing 360-degree sound for virtual reality settings using existing techniques. The objective is to generate as realistic 3D audio for virtual reality settings as feasible. This requires the technology to fulfil two criteria: It must be able to recreate genuine, recorded acoustic environments as well as synthesise non-existent ones. The approach must also be successful in producing these audio experiences through both headphones and loudspeakers in such a way that natural sound is perceived from all angles.

- Tampere University of Applied Sciences, TAMK

TAMK Media and Art Sector educates students in the international media and arts sectors. The study modules are intended to lead to high professional competencies in the following areas: game design and production, emerging media production (VR/AR/MR/XR), motion graphics design, production and content design, animation, music production and music business, songwriting, sound design, event production, cultural export, and entrepreneurship.Tampere University of Technology, TUT

The CIVIT Research Centre for Immersive Visual Technologies is a collaboration between the Departments of Signal Processing and Pervasive Computing. Its primary goal is to provide knowledge and facilities for researching and exploiting evolving visual technologies, as well as the associated new user experience, with the goal of improving existing and developing new scientific and industrial applications that need sophisticated visualisation.

The study topics of the Virtual Reality and Graphics Architectures (VGA) group are computer graphics hardware architectures and virtual reality.

The Novi Research Center is a division of the Industrial and Information Management Unit. The study topics of Novi include VR/AR business concepts and value generation. In general, the research center seeks to comprehend phenomena related to the knowledge economy and the development of knowledge-based value.

- University of Helsinki

The Visual Cognition Research Group focuses on visual cognition, particularly virtual reality, natural image perception, and the application of vision science to new display technologies. The research group has a lengthy history of investigating head-mounted displays and virtual reality. It investigated illness symptoms using several consumer head-mounted displays, as well as how effectively head-mounted displays may be used in everyday situations. As virtual reality and 360-degree films gain traction in a variety of fields, the organisation is directing its research efforts in this direction.

- University of Oulu

The Center for Machine Vision and Signal Analysis (CMVS) brings together computer vision and biosignal analysis experts from the University of Oulu. The Center for Machine Vision and Signal Analysis produces research findings in a wide range of fields, including texture analysis, face image analysis, 3D computer vision, energy-efficient embedded system designs, and biomedical engineering. The Local Binary Pattern (LBP) technique, LBP-based face descriptors, and geometric camera calibration methods are among the highlights of its research. Affective computing, perceptual interfaces for human-computer interaction, and biometrics, augmented reality, and biosignal analysis are some of the areas of application for CMVS's current research.

- University of Tampere, UTA

Tampere Unit for Computer-Human Interaction (TAUCHI) researches human–technology interactions. It conducts a wide variety of multidisciplinary research on technology-mediated new multimodal interactions with devices, surroundings, and people. The goals are to create better and more intuitive user interfaces for the future by using gestural interfaces, gaze tracking, haptics, mixed reality, computer vision, and virtual avatars.

- University of Turku, UTU

The Department of Future Technologies is a scientific research and teaching organisation that focuses on ICT. The goal of the study, particularly in the MIRACLE project, is to develop cost-effective ways to produce appealing mixed reality apps for cultural tourism and out-of-classroom learning, using multidisciplinary teams and in collaboration with local companies. The research focuses on the creation of cost-effective tools and procedures, the analysis of learning experiences using AR applications, and the seamless integration with social media.

VTT Augmented Reality Research is working on Augmented Reality (AR), which is the method of superimposing virtual items in the user's perspective of the actual world, to provide an unique visualisation technology with a wide variety of applications. Mixed Reality (MR) refers to representations and/or settings in which physical and virtual components can coexist and interact. VTT began working in the field of augmented reality (AR) in 2000 with the production of virtual ads for live TV broadcast. In the years afterwards, VTT has expanded its expertise to include game and entertainment applications.

The major global firms (Facebook, Apple, Sony, HTC, Microsoft, and so on) are already strategising their roles in the VR ecosystem. There is a rush for the Finnish VR-scene to develop before these soon-to-be ready-made devices enter the marketplace. In the Finnish VR sector, new business strategies (such as generating high-quality content or building new platforms) are continuously being explored.
There is a growing body of academic studies demonstrating the advantages of utilising virtual reality in teaching (Dede et al., 2017). Despite this, and despite the fact that Finland is recognised as one of the world's top countries in the field of education, VR is not widely employed in the classroom. There appears to be a scarcity of ready-made educational VR-applications that are both simple to use and capable of delivering enough information to justify all of the costs. However, there is interest in using VR technology in education in the future, although this may necessitate high-quality social VR apps and/or high-quality instructional material that is scalable and user-generated, at least in part.

The VR landscape diagram is based on our extensive research and information gathered during the project. The VR ecosystem is developing and evolving very quickly, and therefore the described landscape can be seen only as a momentary snapshot of the situation. For example, during the project, some new companies were established and at least three VR/AR companies ended their life due to bankruptcy or some other reason. During the project period also Nokia announced that it ceases investments in developing its Ozo camera. Support and sales of the existing generation will continue.
There were, at the time of writing the report, more than 60 companies in Finland identified to work on VR/AR. In addition to these companies, there are also a remarkable number of VR/AR utiliser companies, which are not shown in the picture. These companies can basically represent any industry or branch.

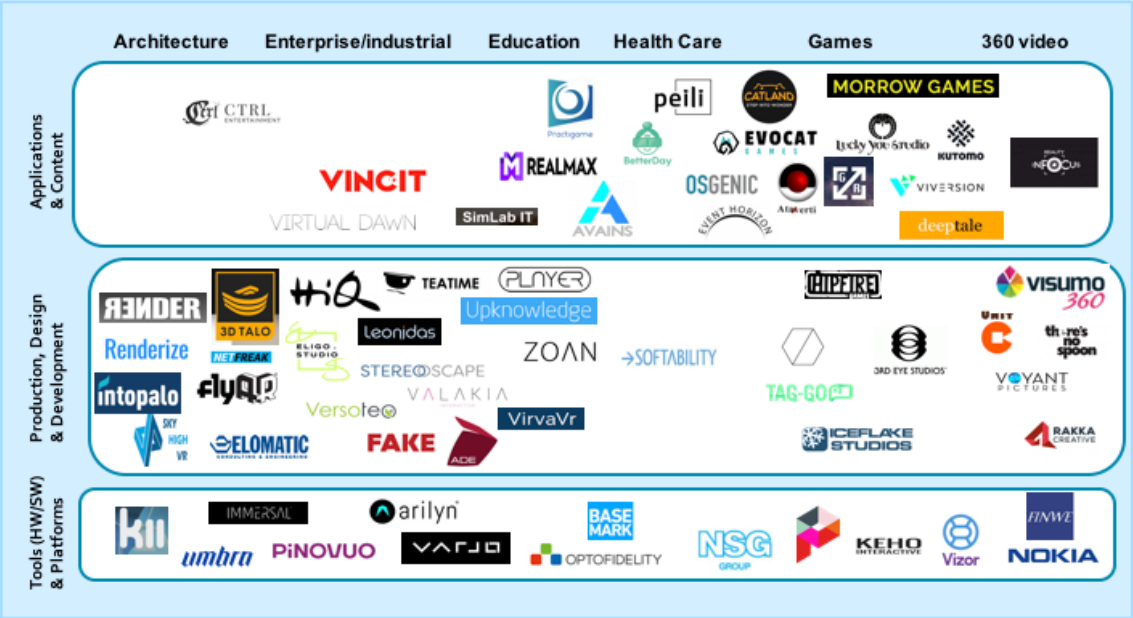

Source: http://www.digitalmedia.fi/wp-content/uploads/2018/02/DMF_VR_report_edit_180124.pdf

The majority of firms in the production category create VR content for industrial and enterprise applications. Another significant industry is game development. So far, prominent media firms have not been involved in the creation of VR/AR content.

Approximately half of the firms stated that they focus on VR, one-fourth of the companies did both AR and VR, six companies focus only on AR, and six companies work on 360 video.

The VR landscape also includes firms that create VR technologies and platforms. These include firms that focus on virtual reality and the technology that enable it. Vizor, for example, is building a VR production and hosting platform that allows users to easily create 360-degree tours, tales, and Web VR experiences by dragging and dropping media components.
A deeper look at 60 Finnish VR/AR firms has been conducted, which cover the whole range of the Finnish VR/AR environment. According to the research, around one-third of the businesses (20/60) work in general industrial applications, including marketing, and no one application field can be identified. Another major industry is gaming, which employs around one-fourth (14/60) of the firms.

Six businesses' primary application areas are architectural and learning applications (10 %). Four businesses are focusing on health care, while two are focusing on cultural applications. In addition to this, eight firms offer the necessary software and hardware.

Virtual reality and augmented reality (VR/AR) are still in their infancy. As a result, the majority of the businesses are likewise quite young. Two-thirds of the businesses are less than five years old. This indicates that 40 of the 60 firms discovered may be classified as start-ups. Several new businesses have emerged in the last three years. years.

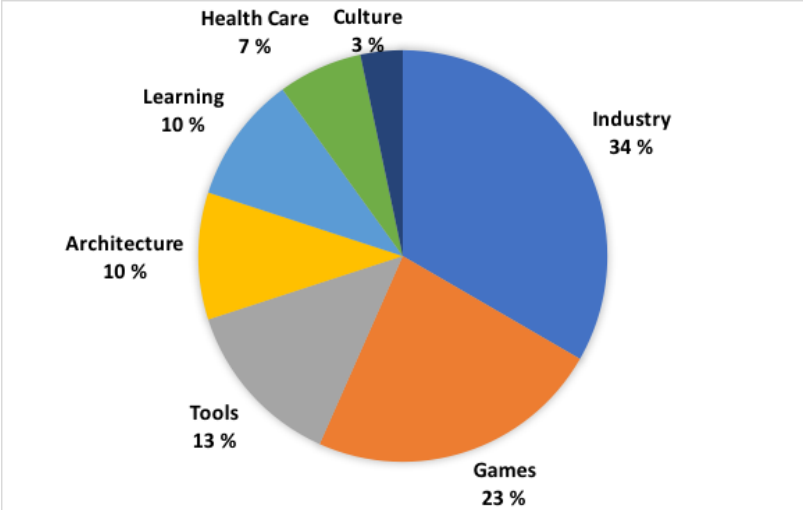

Source: http://www.digitalmedia.fi/wp-content/uploads/2018/02/DMF_VR_report_edit_180124.pdf

Source:

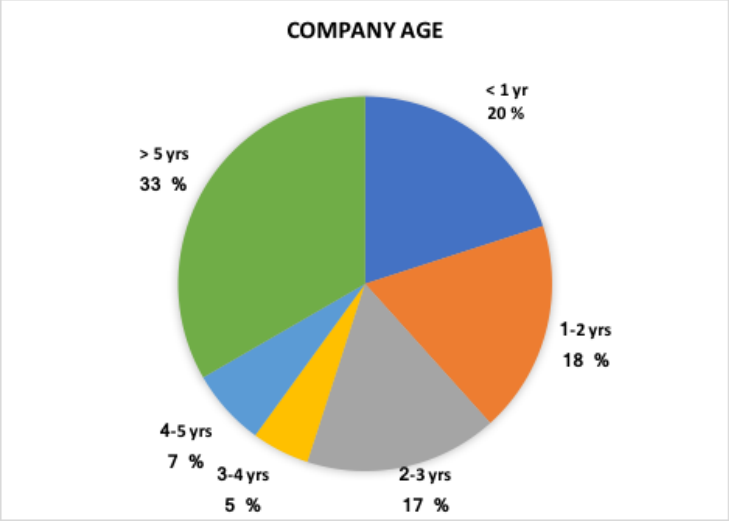

http://www.digitalmedia.fi/wp-content/uploads/2018/02/DMF_VR_report_edit_180124.pdf

A startup's income is generally extremely minimal. Nearly half of the firms, or 27 in total, had no income at all. Fourteen firms had sales of less than €200,000, eight had revenue of between €200,000 and €1 million, and eleven had revenue greater than €1 million. Based on the declared activities of the firms, we may conclude that the companies with a revenue more than €200,000 are primarily engaged in fields other than VR/AR. In such firms, the VR/AR industry appears to be minor in comparison to the main business.

INDUSTRIAL EXPERT INDEX

New technologies on educational market in Finland

This section is based on European Commission report *Education and Training Monitor. Finland* and *EAF Guide for Entering the Finnish Education Market –Key Facts, Resources & Contacts*.

Education and technology in Finland- landscape

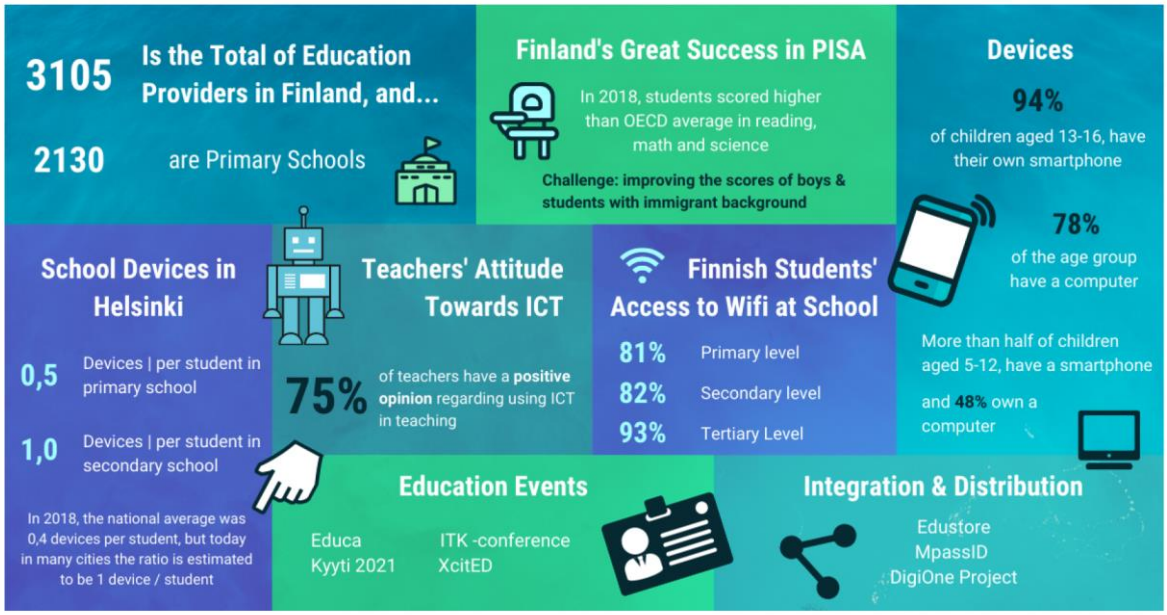

Source: EAF Guide for Entering the Finnish Education Market –Key Facts, Resources & Contacts, https://educationalliancefinland.com/news/guide-entering-finnish-education-market-–-key-facts-resources-contacts

In the early 2000s, Finland gained noted for its high-quality education system. Teachers are regarded as academic specialists and are held in high regard by the general population (Simola, 2005). According to the OECD Teaching and Learning International Survey (TALIS)1 (OECD, 2019a), the proportion of Finnish teachers who think their profession is valued is the highest in the EU (58.2 %) (17.7 % at EU level).

Teachers do not believe they are well equipped to teach in multicultural and multilingual environments, or to use ICT. According to TALIS (OECD, 2019a), the proportion of Finnish teachers who feel well or very well equipped to utilise ICT in the classroom is the second lowest in the EU (21.5 %, EU average 39.4 %). 19% believe they require professional growth in this area (EU average 16.1 %). However, more than half of those polled said it is covered in their official schooling (55.6 %, EU average 52.9 %). According to TALIS, the proportion of teachers who believe they are well or very well equipped to teach in a multicultural and/or multilingual context is among the lowest in the EU (13.9 % , EU 23.8 %). The proportion of those reporting a high level of need for CPD in this area (6.9 %) is lower than the EU average of 13.4 %.

In Finland, vocational education and training (VET) is an appealing learning route, and its efficacy is gradually improving. In 2017, over 52 500 new students enrolled in official VET programs in Finland,

accounting for 74.4 % of all new upper secondary students, a comparable figure to 2016. In 2017, total enrolment in upper secondary VET in Finland remained almost the same, with 70.6 % of pupils engaged in VET, significantly above the EU average of 47.8 %. VET students participating in integrated school and work-based programs made up 13% of the total. The employment rate of recent VET graduates increased somewhat in 2018, climbing to 78.5 % from 77.7 % in 2017, but still falling short of the 2018 EU average of 79.5 %.

A national study on digital learning at school conducted in 2017-2018 found that the usage of digital technologies in teaching and learning is progressing positively but slowly (Tanhua-Piiroinen et al., 2019). Progress may be tied to the Finnish government's 'Knowledge and Education' and 'Digitalisation' programs, which run from 2016 to 2019. Municipalities received around EUR 10 million in 2017-2018 to recruit mentor teachers to enhance the use of digital tools10. The transient character of this approach, according to labour unions, raises worries about its long-term viability (OAJ, 2018). There are significant disparities in progress toward school digitalisation across and within towns.

Finland has the greatest proportion of ICT experts in the labour force in the EU (6.8 % of total employment in 2019), although the proportion of businesses reporting hard-to-fill openings for ICT specialist jobs is higher than the EU average (6.95 % , EU average 4.64 %). The current trend in graduation rates would worsen the shortage: the %age of graduates in ICT declined from 7.1 % to 6.3 % (EU 3.6 %) in 2017, while those in natural sciences, mathematics, and statistics remained low at 4.8 % (EU 7.6 %). The gender disparity (approximately three times more males than girls) is significantly more than the EU average.

The average %age of Finnish students attending schools with wireless LAN is the highest in Europe; 81 % of primary students, 82 % of secondary students, and 93 % of tertiary students have WIFI connection at their school (2nd Survey of Schools: ICT in Education).

In general, each city and county in Finland has its own set of norms and protocols for procuring EdTech for schools. Some organisations centralise all purchases, whilst others allow instructors to make minor purchases. For example, the city of Helsinki has prepared this useful infographic regarding the procurement procedure for its Education Division. Higher education institutions, such as universities and universities of applied sciences, make their own purchases. Faculty leaders or individual professors, for example, may have a limited purchasing budget.

Finnish EdTech Resellers

Ilona IT – Ilona IT operates an online educational product store. They also provide a number of training sessions and events for both EdTech suppliers and buyers.
Tevella – Tevella creates learning environments for both study and play. Their product line includes pre-school and elementary school tools, equipment, furniture, and interior decorations. Tevella is also a toy and game supplier.
ATEA Finland – ATEA is an IT product shop (ATEA eShop) that supplies schools with the necessary technology infrastructure and consults on digitalisation.
Suomen Koulupalvelu – Suomen Koulupalvelu has been providing a range of technical tools to schools, municipalities, and enterprises for over 30 years.

INDUSTRIAL EXPERT INDEX

EdTech Investors

Sparkmind.vc - The first Nordic venture capital firm focusing on the education sector. Invests in teams with the goal of transforming early childhood, K-12, higher, secondary, and vocational education, as well as corporate and lifetime learning.
Finnish Business Angels Network - One of Europe's largest and most active business angel networks.
Courage Ventures - A global network of boutique advising and seed investment funds. They collaborate with established businesses, public sector institutions, and startups.
Polkuni - A hands-on investment and activation firm located in Helsinki and Hong Kong. Their primary goal is to establish a cultural bridge between Finland and Asia.

Governmental Operators

The Finnish National Agency for Education (EDUFI)
EDUFI is in charge of policy implementation ranging from early childhood education and care (ECEC) through upper secondary education. EDUFI creates fundamental curriculum and certification required for VET, oversees spending, supports and develops instructors, and encourages internationalisation.

Ministry of Education and Culture
The Ministry of Education and Culture is in charge of developing policies in the fields of education, science, culture, sports, and youth. The Ministry of Education and Culture's administrative branch consists of 13 agencies, including the Finnish National Agency for Education, the Academy of Finland, and the Arts Promotion Centre Finland.

OAJ - The Trade Union of Education in Finland
The Finnish Teachers' Union represents the interests of professionals in the education, training, and research sectors, ranging from early childhood education through adult education and training.
Finnpartnership - a commercial cooperation initiative funded by the Finnish Ministry of Foreign Affairs and handled by Finnfund By fostering business between Finland and developing nations, Finnpartnership hopes to have a beneficial influence on development. Business Partnership Support (a grant for development initiatives) and Matchmaking are their primary offerings.

Top gear competitors strengths and weaknesses

This section is based on resources of www.classvr.com.

OCULUS RIFT	
Strengths	**Weaknesses**
High performance Positional tracking Engaging experience	Requires Personal Computer Basically for gaming High price No controls for classroom use No content of the curriculum

HTC VIVE	
Strengths	**Weaknesses**
Top quality Vital community of developers A diverse set of hardware components	Expensive Requires advanced Personal Computer No controls for classroom use Limitations for educational use Complex setup and operating Requires external sensors

SONY PLAYSTATION VR	
Strengths	**Weaknesses**
Relatively lower costs Setup and configuration is simple Quality games	No controls for classroom use No content for education A need of TV set or PC for setup Ecosystem and content is closed Wired to console

SAMSUNG	
Strengths	**Weaknesses**
Widely available Separate – no wire	Requires mobile phone Pricey Overheating causing disruptions Classroom management unavailable

GOOGLE EXPEDITIONS	
Strengths	**Weaknesses**
Low cost No wire	Requires mobile phone Long setup Overheating causing disruptions Device management unavailable

EDU VR	
Strengths	**Weaknesses**
Low cost No wire “Standalone” Educational content Service and maintenance support Possibility to create own content by users Classroom activities management	No tracking

Co-funded by the
Erasmus+ Programme
of the European Union

INDUSTRIAL EXPERT INDEX

Porter's Five Forces analysis

The virtual reality industry from its beginnings in 2012 has managed to develop. Technology that takes people into different worlds without leaving home, like from science fiction movies, was and is extremely promising and attractive. It also has many uses, not only for entertainment, as it initially seemed. Still, despite many who are already encouraged to use it, this market seems to require a deeper look and vigilance to ensure that market decisions are burdened with the lowest possible risk. On the basis of VR market analysis, gear comparison and educational market, we are able to present below the findings of Porter's Five Forces analysis. This section is based on https://sites.google.com/site/edgarscis4397portfolio/porter-s-competitive-analysis.

The threat of new entrants

The risk of the emergence of new entities in this industry is relatively low due to the fact that the technology is still quite new and expensive. Entities that may wish to enter this industry must have a background of specialist knowledge, and this is still being developed. If a new company joins the industry and fails, it will suffer huge losses due to the need to make large investments to even produce VR goggles.

The threat of industry rivalry
There is already a risk of industrial competition in this industry, but competition is still slight. Applies to existing strong players. They were characterised in the part devoted to market analysis (gear). There are other VR Headset sets available on the market, but compared to the leading players, the value offered to the customer is small. At the same time, it means that the leading competitors keep improving their own solutions.

The threat of substitutes

The threat of substitutes already exists, but it is not a very big threat. There are VR goggles that work by allowing users to use their smartphones to run the software necessary for the operation of the VR goggles. However, this is a significant limitation of the smartphone's capabilities - based on its specification, experience is possible, so they are limited. The kits of the main players in this market are not dependent on other devices, they have their own software, process. They are dedicated to VR.

The bargaining power of buyers

The bargaining power of buyers in the VR industry is very low in relation to the best players. Consumers now have several options for VR headsets. In addition, the purchase of one of the sets de facto means that the consumer is already with his purchase, because the purchase of another one is a large expense. A possible solution is to resell at a lower price on the secondary market. Switching from one supplier to another is very difficult.

The bargaining power of suppliers

The bargaining power of suppliers for the VR industry is also low. The technology used for production already exists. It is the manufacturer who is stronger in this system, wanting, for example, to choose a different material for production. Competition between component suppliers can rely on quality.

SWOT Analysis

Strengths	Weaknesses	Opportunities	Threats
Competitive gear Private contacts with secondary schools and university managers Cooperation with high-qualified programmers Top-quality educational content Competitive price Good customer service Ability to introduce new educational content	No credit history Low level of company recognition	Rising interest in VR technologies usage in education Rising competition in education Online education development Online education imposed due to Covid-19 pandemic Low level of VR technologies usage in education (low competition)	New entrants New technologies development Obstacles in international shipments due to Covid-19 pandemic Sudden increase in costs Lack of qualified staff Negative impact of Covid-19 pandemic on staff supply Lack of teachers willing to cooperate Low level of ICT competences among teachers Drop in public investment in education

INDUSTRIAL EXPERT INDEX

Marketing plan

General marketing plan and objectives.

Years 1-3	Provide satisfactory user-driven products and services Focus on gaining more customers Developing new products and services according to customers' needs
Years 3-5	Establishing sustainable relations with existing customers New services or products offered t existing customers Increasing market share Exploring European markets
Years 5 onwards	Operational excellence Maintaining current market position Expanding abroad

The marketing activity is oriented to counter threats, fix vulnerabilities and exploit opportunities.

Marketing key activities and objectives:

- Build strong positive image of a reliable company providing educational technologies on Finnish educational market.
- Promoting good customer service to attract competitor's customers.
- Establishing solid friendly relationship with strategic stakeholders on Finnish educational market.
- Using a pre-service trying, to let the customers try the service before the purchasing hiring an experienced trainer to up-skill school and university staff.
- Extensive promotion strategy in social media.
- Personal sales with the use of personal contacts.
- Launching updated curriculum to revitalise consumer demand.
- Constant customers' needs monitoring.
- Adapting "green" practices to minimise costs.

The product

The product is described on page 125. It will be offered in two alternative packages:

1. Minimum package.

The minimum package contains headsets with already downloaded software prepared by eduVR.
The software for the following courses and levels will be available:

- Biology, all levels of secondary education.
- Chemistry, all levels of secondary education.
- Geography, all levels of secondary education.
- Physics, all levels of secondary education.
- Basics of economic geography (Bachelor-level).
- Fundamentals of human anatomy (Bachelor-level).
- Introduction to chemistry (Bachelor-level).
- Introduction to physics (Bachelor-level).

2. Extended package

In the extended package, apart from the minimum package, the client receives also technical support, maintenance and service.

3. Future packages

In future, eduVR plans to develop new curriculums. The company also plans to develop personalised packages for specific orders. This will be possible after 3 years of operating when achieving satisfactory economic performance. It is also planned to expand abroad, so necessary translations will be needed.

Pricing strategy

In the beginning, the firm will have no references or completed projects, resulting in difficult negotiations. As a result, I'll have to meet the demands of the customers: The client will set the budget. We will give the lowest price with the smallest possible margin of manufacturing. A security deposit will still be required. We will provide package offers. The firm will eventually be able to make the transactions more flexible and profitable. The corporation will set the price, not the client. Our eduVR established the contract provisions.

The company will monitor public procurement processes as VR technologies are already noticed in Finland and possibility of public procurement in this area is possible.

Promotion

Key activities are going to concentrate on gaining customers' interest. The most important promotion activity is going to be held by the owner via private contacts (see also Distribution). During the personal meetings the following activities will be conducted:

- Demonstration of the product to personal contact.
- Testing the product.
- Getting the customer feedback and use that to improve upon the product feature before the initial launch.
- Research on potential customer's requirement and alter the offerings to suit their requirements.

Additional promotional operations will be provided via:

- Social Media Platforms.
- Digital Advertising.
- Mobile-Friendly Website.
- Engaging Video Content.

Distribution

The most important sales technique is going to be personal sale. The owner of eduVR has many private contacts with key managers in over 30 Finnish secondary schools and deans in 5 universities. He has already conducted some interviews and gain interest in company's offer. 5 Letters of Intent has been signed.

INDUSTRIAL EXPERT INDEX

Organisation management

Owner/ Chief Manager:

- Increases management's effectiveness by recruiting, selecting, orienting, training, coaching, counselling, and disciplining managers; communicating values, strategies, and objectives; assigning accountabilities; planning, monitoring, and appraising job results.
- Creates, communicates, and implements the organisation's vision, mission, and overall direction – i.e. leading the development and implementation of the overall organisation's strategy.
- Responsible for fixing prices and signing business deals.
- Responsible for providing direction for the business.
- Responsible for signing checks and documents on behalf of the company.
- Evaluates the success of the organisation.
- Reports to the board.

Marketing and Sales Executive:

- Identifies, prioritises, and reach out to new clients and business opportunities.
- Identifies development opportunities; follows up on development leads and contacts.
- Develops, executes and evaluates new plans for expanding increased sales.
- Documents all customer contact and information.
- Represents the company in strategic meetings.
- Helps to increase sales and growth.

Service Executive

- Responsible for training consumers in technology aspects.
- Ensures that clients are provided with sufficient software support.
- Receives complaints from clients and channel it to the appropriate quarters.
- Handles any other duty as assigned by chief manager.

Educational Content Executive:

- Responsible for establishing contracts with teachers.
- Responsible for establishing contracts with software programmers.
- Responsible for smooth cooperation between teachers and programmers in order to produce educational content.
- Responsible for cooperation with customers in the area of content demand.

Manufacturing and Logistics Processes Executive:

- Responsible for contacts with the manufacturer.
- Responsible for quality supervision.
- Responsible for on-time deliveries of manufactured hardware.
- Responsible for logistics.

Accountant:

- Responsible for preparing financial reports, budgets, and financial statements for the organisation.
- Provides management with financial analyses, development budgets, and accounting reports.
- Responsible for financial forecasting and risks analysis.
- Performs cash management, general ledger accounting, and financial reporting for one or more properties.
- Responsible for developing and managing financial systems and policies.
- Responsible for administering payrolls.
- Ensures compliance with taxation legislation.
- Handles all financial transactions for the organisation.
- Serves as internal auditor for the organisation.

Processess Administrator

- Responsible for overseeing the smooth running of HR and administrative tasks.
- Regularly holds meetings with key stakeholders.
- Ensures operation of office equipment.
- Defines job positions for recruitment and managing interviewing process.
- Carries out induction for new team members.
- Responsible for training, evaluation and assessment of employees.

Programmers will be contracted for specific work for developing new educational content.
Teachers of school/academic subjects will be contracted for specific work for developing new educational content.

Co-funded by the
Erasmus+ Programme
of the European Union

INDUSTRIAL EXPERT INDEX

The economics of the business

Financial highlights

Based on the assumptions presented in the content of the business plan, the financial assumptions of the project were analysed.

The revenue forecasts are based on assumptions relating to sales forecasts for both products (1) minimum package and (2) extended package. The forecasted average net sales prices for institutional customers in the first three years are €550 and €750 per kit, respectively.

Sales, Gross Margin and EBIDTA

	1 year	2 year	3 year
Sales	**€ 720 000**	**€ 1 680 000**	**€ 4 070 000**
Direct Cost of Sales	€ 90 000	€ 135 000	€ 202 500
Hardware cost	€ 156 000	€ 364 000	€ 858 000
Service and maintenance	€ 80 000	€ 120 000	€ 180 000
Total Cost of Sales	**€ 326 000**	**€ 619 000**	**€ 1 240 500**
Gross Margin	€ 394 000	€ 1 061 000	€ 2 829 500
Gross Margin %	55%	63%	70%
Expenses			
Payroll	€ 270 000	€ 324 000	€ 388 800
Marketing/Promotion	€ 130 000	€ 156 000	€ 187 200
Depreciation	€ 12 000	€ 14 400	€ 17 280
Quality Assurance	€ 45 000	€ 49 500	€ 54 450
General & Administrative	€ 47 000	€ 51 700	€ 56 870
Total Operating Expenses	**€ 504 000**	**€ 595 600**	**€ 704 600**
Earnings Before Interest and Taxes (EBIDTA)	**-€ 110 000**	**€ 465 400**	**€ 2 124 900**

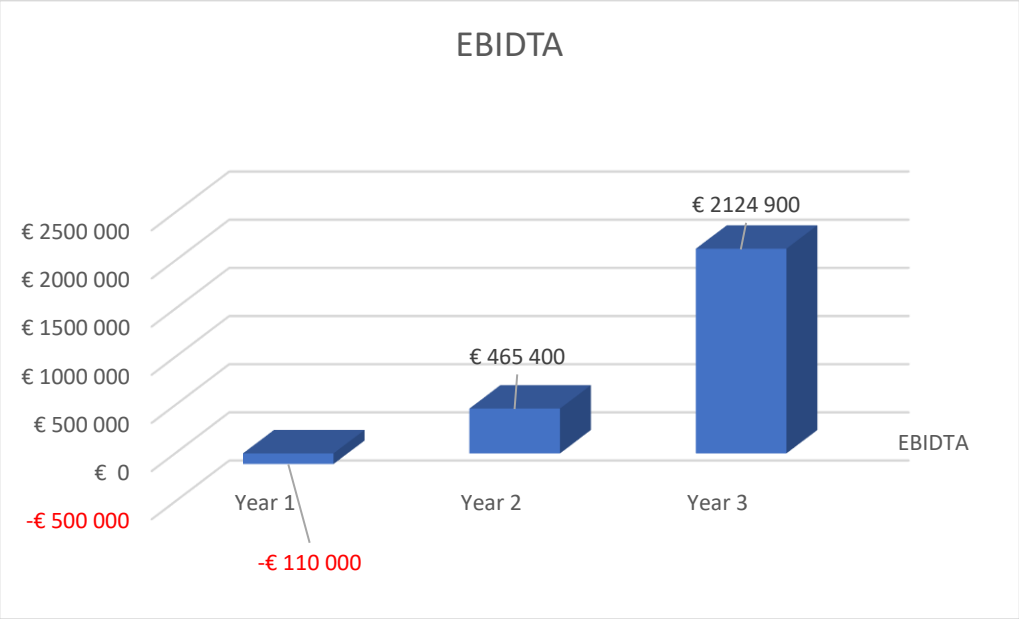

Financial needs

The company is seeking € 500,000 for expansion purposes. The use of funds will be broken down as follows

Marketing of new product lines	€ 60 000
Development of hardware upgrade	€ 160 000
Development of new software products	€ 130 000
Working Capital	€ 100 000
Other (Debt Management)	€ 50 000

References:

Dede, C. J., Jacobson, J., & Richards, J. (2017). Introduction: Virtual, Augmented, and Mixed Realities in Education. http://doi.org/10.1007/978-981-10-5490-7_1

EAF Guide for Entering the Finnish Education Market –Key Facts, Resources & Contacts, https://educationalliancefinland.com/news/guide-entering-finnish-education-market-–-key-facts-resources-contacts

Education and Training Monitor. Finland, European Commission 2019, https://ec.europa.eu/education/sites/default/files/document-library-docs/et-monitor-report-2019-finland_en.pdf

Eurostat, Labour Force Survey, 2018

Eurostat, UOE, 2017

Forbes (2019), The Varjo VR-1: Everything You Need To Know About The Highest-End VR Headset In The World, https://www.forbes.com/sites/jessedamiani/2019/02/19/the-varjo-vr-1-everything-you-need-to-know-about-the-highest-end-vr-headset-in-the-world/#77d8ef225b91

http://classvr.com

http://www.digitalmedia.fi/wp-content/uploads/2018/02/DMF_VR_report_edit_180124.pdf

https://digital-agenda-data.eu/datasets/digital_agenda_scoreboard_key_indicators/visualizations

https://ec.europa.eu/education/sites/default/files/document-library-docs/et-monitor-report-2019-finland_en.pdf

https://projects.tuni.fi/vrinsight/stories/virtual-reality-in-finland/

https://sites.google.com/site/edgarscis4397portfolio/porter-s-competitive-analysis.

https://varjo.com/

https://www.digitaltvnews.net/?p=28668

https://www.mordorintelligence.com/industry-reports/virtual-reality-market

https://www.xedu.co/

Luma Suomi – ohjelma: https://suomi.luma.fi/blogi/

OAJ (2018), 'Tutoropettaja tuli taloon – mutta kuinka pysyvästi?' [A tutor teacher comes to the building – but how sustainable is this?]. https://www.oaj.fi/cs/oaj/Uutiset?&contentID=1408920456686&page_name=Tutoropettaja%2Btuli%2Btaloon_%2Bmutta%2Bkuinka%2Bpysyvasti

OECD (2019a), TALIS 2018 Results (Volume I): Teachers and School Leaders as Lifelong Learners, TALIS.

Simola, H. (2005), 'The Finnish miracle of PISA; historical and sociological remarks on teaching and teacher education'. Comparative Education. 41(4). 455–470.

Tanhua-Piiroinen, E. Kaarakainen, S.-S. Kaarakainen, M.-T., Viteli, J., Syvänen, A. & Kivinen, A. (2019), 'Digiajan peruskoulu' [Primary and Secondary level school at the Digital era]. Valtioneuvoston selvitys- ja tutkimustoiminnan julkaisusarja 6/2019. http://urn.fi/URN:ISBN:978-952-287-634-8

VR/AR industry of Finland, Tekes (2017), https://fivr.fi/survey2017/